FIREGEAR®

LUME SURROUND

The LUME Surround is a seamless, plug-and-play way to bring smoke-less fire to your backyard.

LID INCLUDED

RAVEN
LUME-SUR1-RA



SLATE
LUME-SUR1-SL

WOOD BURNING

SMOKE-LESS EFFECT

SURROUND MADE OF GFRC

Sales | 260.355.5577

orders@firegearoutdoors.com

firegearoutdoors.com

LUME SURROUND

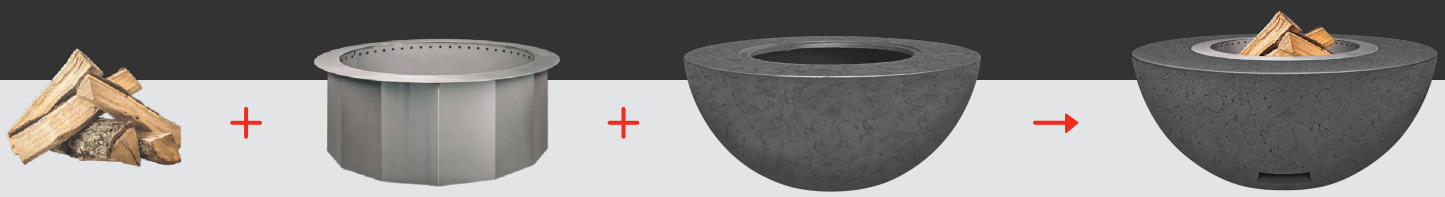

WOOD | METAL SMOKE-LESS FIRE PIT | GFRC ENCLOSURE | LUME SURROUND

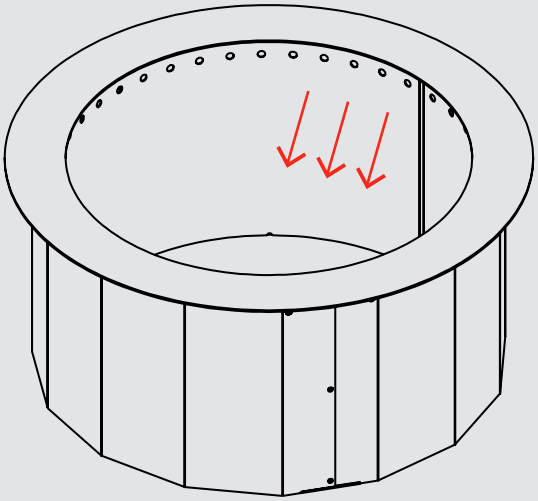

② Air is forced out and ignites

① Air heats up and rises



LUME SURROUND — Smoke-Less Fire Pit inside of a GFRC Enclosure



Introducing the LUME Surround, the ultimate combination of style and functionality. Experience the magic of a smokeless fire pit enclosed within a stunning GFRC bowl, creating an exquisite centerpiece for your outdoor living space.

Included Accessories:

LID: LID-LUME-MS-A
Stainless Steel Protected Lid

Optional Accessories:

WEATHER COVER: COV-SUR1
100% water-resistant, UV-Protected to prevent fading, custom fitted, and feature soft flannel backing, spring cinch lock.

Color Options

SLATE SL

RAVEN RA

Model	Color	Overall Dimensions	Base Width	Interior Diameter
LUME-SUR1-RA	Raven	42" W x 18" H	20" W	23 1/2" W
LUME-SUR1-SL	Slate	42" W x 18" H	20" W	23 1/2" W

Sales | 260.355.5577 orders@firegearoutdoors.com firegearoutdoors.com