FireRock B-VENT FIREPLACE

Fire Rock Products, LLC Birmingham, AL

INSTALLATION, OPERATION, MAINTENANCE and OWNER'S MANUAL

FireRock MODELS 14030; 14036; 14042; 14048

IMPORTANT: This manual contains assembly rules, installation steps and guidelines, and use and maintenance instructions for FireRock B-VENT gas appliances (14000 Series). This manual must become the property of and be reviewed by all current and future users of this product. It is the responsibility of the distributor, general contractor and the installer of this product that the instructions in this manual are followed exactly and, further that the allowed gas log appliance used in this product be installed in strict accordance with the gas log manufacturer's listing and explicit installation and operation instructions.

This Listed Top Vented Gas Log Enclosure is designed for use with Decorative Natural Gas or Propane (LP) Gas Appliances, only.

DO NOT BUILD A WOOD FIRE

WARNING: If the information in this manual is not followed exactly, a fire or explosion may result causing property damage, personal injury or loss of life.

Do not store or use gasoline or any other flammable vapors or liquids in the vicinity of this or any other appliance.

WHAT TO DO IF YOU SMELL GAS

- Do not try to light any appliance.
- Do not touch any electrical switch.
- Do not use any phone in your building.
- Immediately call your gas supplier from a neighbor's phone. Follow the gas supplier's instructions.
- If you cannot reach your gas supplier, call the fire department.

NOT FOR USE WITH SOLID FUEL.

The flue damper must be in the full open position when burning the gas logs.

Massachusetts state code requires the vent damper to be welded open or removed.

- This appliance complies with National Safety and is tested and listed to ANSI Z21.50 - 2003 as vented gas fireplaces.
- Installation and service must be performed by a locally certified gas service agent, licensed plumber or the gas supplier.
- Installation must conform to local codes. Check local codes prior to installation.

In the absence of local codes, installation must conform to current National Fuel Gas Code, ANSI Z223.1.

Tested and Listed by PFS Corporation, Cottage Grove, WI USA. PFS Report Number 08-155

GENERAL INFORMATION

Models FR-14030, FR 14036, FR 14042, and FR 14048 are tested and listed by PFS Corporation, Cottage Grove, WI, USA, Report No. 08-155. The 14000 Series models are top-vented, gas only fireplaces that are listed for use only with the FIRE-LOG Gas Log appliance as manufactured by Heatmaster, Inc. These gas appliances come with a gas control valve that includes an automatic shut-off switch. The gas valve has a standing pilot light assembly which is available as either a standard safety pilot or a millivolt remote control pilot assembly.
The exhaust flue gases are to be vented through the top of the unit with B-Vent piping. A ten inch (10") diameter, double wall B-Venting system and a listed vent cap are not supplied but are required for proper operation of all FireRock 14000 Series fireplaces. See venting instructions on pages 19 - 21.

WARNING: This gas appliance must not be connected to a chimney flue servicing a solid fuel burning appliance.

Intended Use Statement:
The 14000 Series is intended to burn propane (LP) gas or natural gas, only. This appliance is not intended to be used as a primary source of heat. The 14000 Series and its approved components are safe when installed according to this installation manual and when operated as recommended by the manufacturer. Unless you use Fire Rock Products, L.L.C. approved components tested for this appliance you may cause a fire hazard or serious injury.

Before you begin the installation of this appliance read these instructions completely.
Fire Rock Products, L.L.C. disclaims any responsibility for the following actions:

1. Modification of the appliance or any of its components.
2. Use of any component part not approved by Fire Rock Products, L.L.C. in combination with this appliance.
3. Installation or operation in a manner other than instructed in this manual.
4. Burning of anything other than the listed gas log unit and the type of gas approved for use in this gas appliance.

Note(s): The most important areas of concern with the installation of the top venting 14000 Series are clearance to combustible materials, proper assembly of component parts, load carrying capacity of underlying floor system, height of chimney system, hearth extensions and the techniques employed in applying finishing materials to the wall surrounding the 14000 Series fireplace. Each of these topics will be covered in detail throughout this manual. Special attention must be given to each topic as the installation progresses.

The installation of the 14000 Series fireplace must conform with local codes or, in the absence of local codes, with the current *National Fuel Gas Code, ANSI-Z223.1/NFPA 54 or the current Natural Gas and Propane Installation Code, CSA B149.1.*

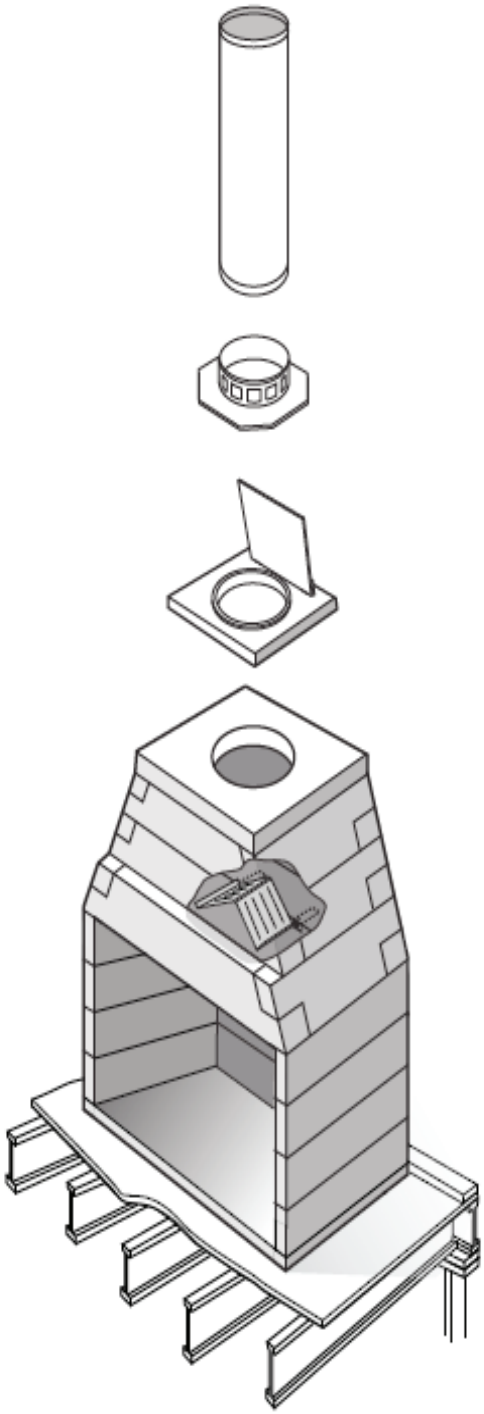

SAFETY INFORMATION

WARNING: This product contains or generates chemicals known to the state of California to cause cancer or birth defects or other reproductive harm.

Important: Read this owner's manual carefully and completely before trying to assemble, operate or service this fireplace. Improper use of this fireplace can cause serious injury or death from fire, burns, explosions and carbon monoxide poisoning.

CAUTION: Carbon monoxide poisoning may lead to death!
This fireplace is a vented product and will not produce any gas leakage into your home if properly installed by a qualified service person. If this unit is not properly installed by a qualified service person, gas leakage can occur.
Propane (LP) gas and natural gas are both colorless and odorless gases. An odor-making agent is added to each of these gases to help you detect a gas leak. However, the odor added to these gases can fade and gas may be present even though no odor exists.

Carbon Monoxide Poisoning: Early signs of carbon monoxide poisoning resemble flu symptoms, including headaches, dizziness or nausea. If you have these signs the fireplace may not have been installed properly. Get fresh air at once! Have fireplace inspected and serviced by a qualified service person or your gas supplier. Some people are more affected by carbon monoxide than others. These include pregnant women, people with heart or lung diseases or anemia, people at high altitude or under the influence of alcohol. Fire Rock Products, L.L.C. strongly recommends the use of a carbon monoxide detector/alarm device wherever gas fired appliances are in use.
All parties either involved in or associated with the installation, service and use of this fireplace must read this entire manual. Keep this manual for reference and as a guide book to safe operation of this fireplace.

Warning: This unit is not for use with solid fuel.

1. Always check local building codes governing fireplaces and fireplace installations. The 14000 Series installation must comply with all local, regional, state and national codes and regulations.
2. The B-Vent chimney system is for top venting only and must vent vertically through the roof of the building.
3. The 14000 Series unit is listed for use with the FIRE-LOG decorative gas log appliance only, as manufactured by Heatmaster, Inc.
4. This appliance is only for use with the type of gas indicated on the rating plate. This appliance is not convertible for use with other gases.
5. For propane (LP) use do not place propane supply tank(s) inside any structure. Locate propane supply tank(s) outdoors. To prevent performance problems, do not use propane fuel tank of less than 100 lbs. capacity.
6. Do not install the 14000 Series fireplace in a mobile home or recreational vehicle.

Note(s):

1. Never install where curtains, furniture or other flammable objects are less than forty-eight inches (48") from the front of the fireplace opening.
7. Do not install the 14000 Series fireplace in high traffic areas or in windy or drafty areas.
8. This fireplace reaches high temperature. Keep children and adults away from hot surfaces to avoid burns or clothing ignition. Fireplace will remain hot for a time after shutdown. Allow surfaces to cool before touching.
9. Turn the FIRE-LOG gas logs off and allow to cool before servicing. Always shut off any electricity and gas to the 14000 Series while working on it. Only a qualified service person should install, service or repair this fireplace. Have fireplace inspected annually by a qualified service person.
10. It is imperative that the unit's control areas, burners and circulation air passages be kept clean. More frequent cleaning may be needed due to excessive lint and dust from carpeting, bedding material, pet hair, etc. Turn off gas valve and pilot light before cleaning fireplace.
11. Venting system should be inspected annually by a qualified service person. If needed have venting system cleaned or repaired.
12. Keep all combustible material, gasoline and other flammable liquids at a safe distance from the fireplace. Do not use the fireplace where these items are used or stored. Decorations, clothing and other such combustible items should not be placed on the fireplace.
13. Do not use the 14000 Series to cook food or burn paper or other objects.
14. Do not use any solid fuels - wood, coal, paper, cardboard, etc. - in this fireplace. Use only the gas type listed on the fireplace's gas log label.
15. Do not in any way obstruct the flow of combustion and ventilation air. Provide adequate clearances around air openings into the combustion chamber as well as adequate accessibility clearances for servicing and proper operation.
16. If the fireplace is installed directly on carpeting, vinyl tile or any combustible material other than wood flooring or wood sub-flooring, the appliance shall be installed on a metal sheet, cementitous board or wood panel extending the full width and depth of the unit.

SAFETY INFORMATION (cont.)

17. Wherever insulation is used, the fireplace must not be placed directly against it. Keep all insulation and vapor barriers a minimum of three inches (3") away from all 14000 Series fireplaces and B-Vent chimney components.
18. Insulation or vapor barriers, if used, must first be covered with gypsum board, plywood, particle board or other sheathing material to assure that insulation and vapor barriers remain in place. Do not pack or fill required air spaces with insulation or other material. No material is allowed in these spaces.
19. Never install a 14000 Series component, chimney component or accessory that has visible or suspected physical damage as a result of handling or transportation. These items should be inspected by a qualified representative to ensure safe condition. When in doubt, consult your local supplier.
20. Do not alter or modify B-Vent metal flue or flue components under any circumstances. Modification or alteration of the chimney components may void manufacturer's warranty, listings and approvals.
21. Do not use a fireplace blower insert, heat exchanger or any other product not specified by the manufacturer herein for use with this fireplace.
22. Do not use the 14000 Series appliance if any part has been under water. Immediately call a qualified service technician to inspect the appliance and to replace any part of the control system and any gas control which has been under water.
23. The 14000 Series fireplace is not intended to heat an entire home or to be used as a heat source.
24. Negative pressures may result in poor flame appearance, soot build-up, damage to property and possible severe personal injury. To ensure that an adequate supply of combustion air is accessible verify with local HVAC engineer.
25. Children and adults should be alerted to the hazards of high surface temperature and should stay away from this appliance to avoid burns or clothing ignition.
26. Young children should be carefully supervised when they are in the same room as the appliance.
27. Clothing or flammable material should not be placed on or near the appliance.
28. Installation and repair should be done by a qualified service person. The appliance should be inspected at least annually by a professional service person. More frequent cleaning may be required due to excessive lint from carpeting, bedding material, etc. It is imperative that control compartments, burners and circulating air passageways of the appliance be kept clean.

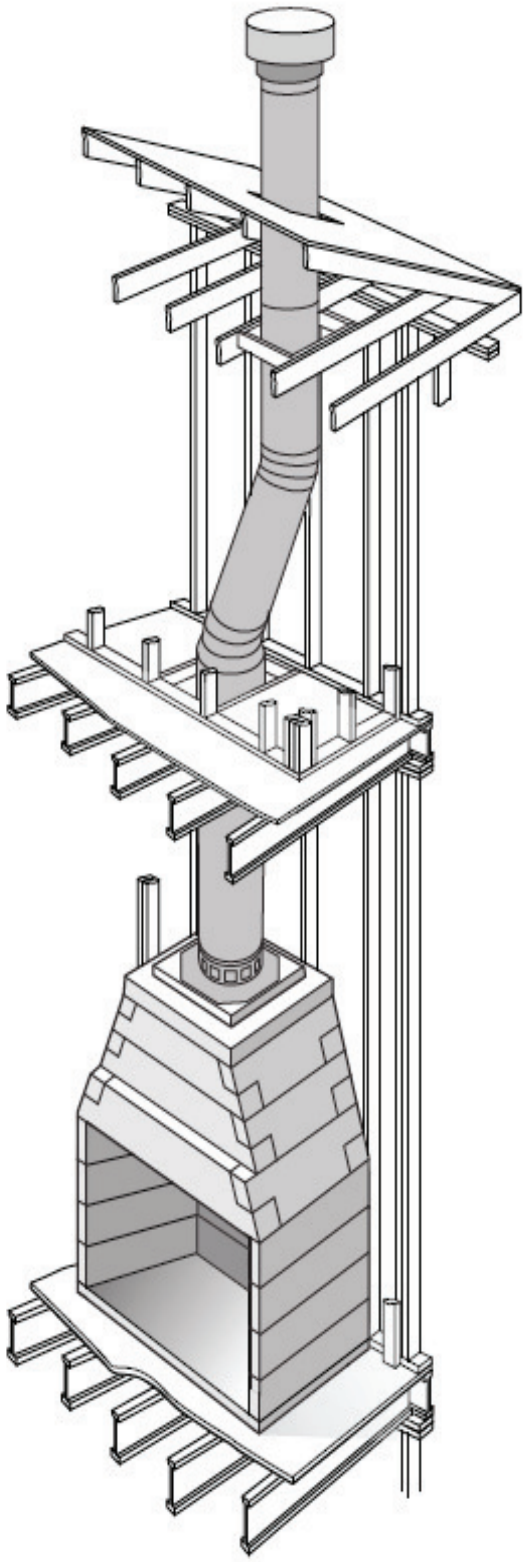

FR 14030 30” Fire Rock

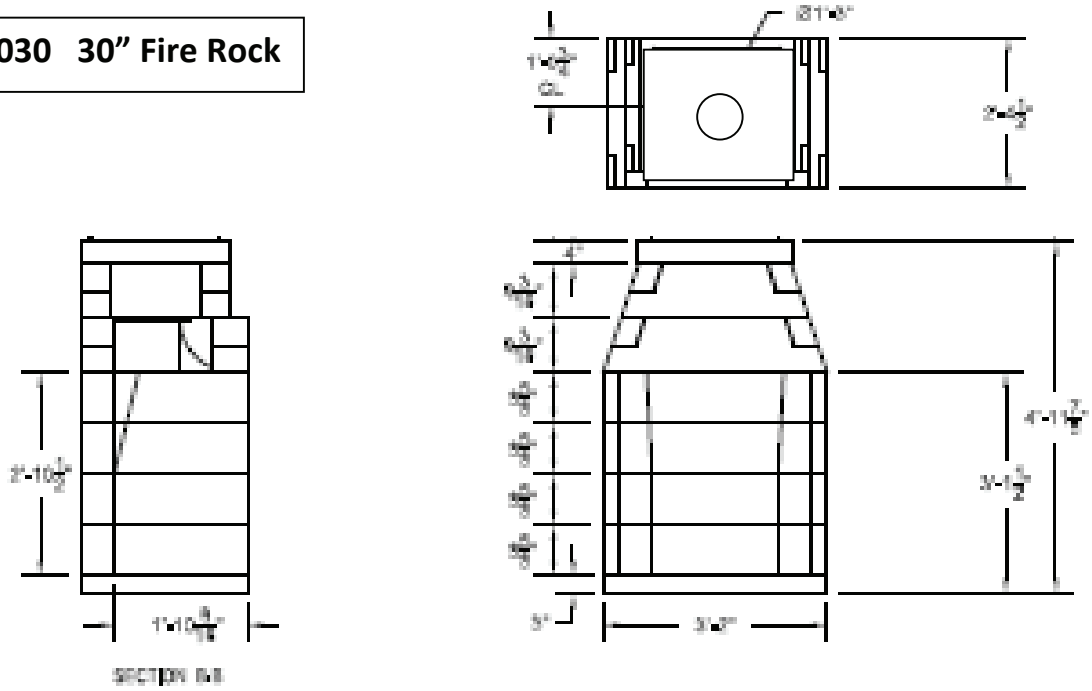

FR 14036 36” Fire Rock

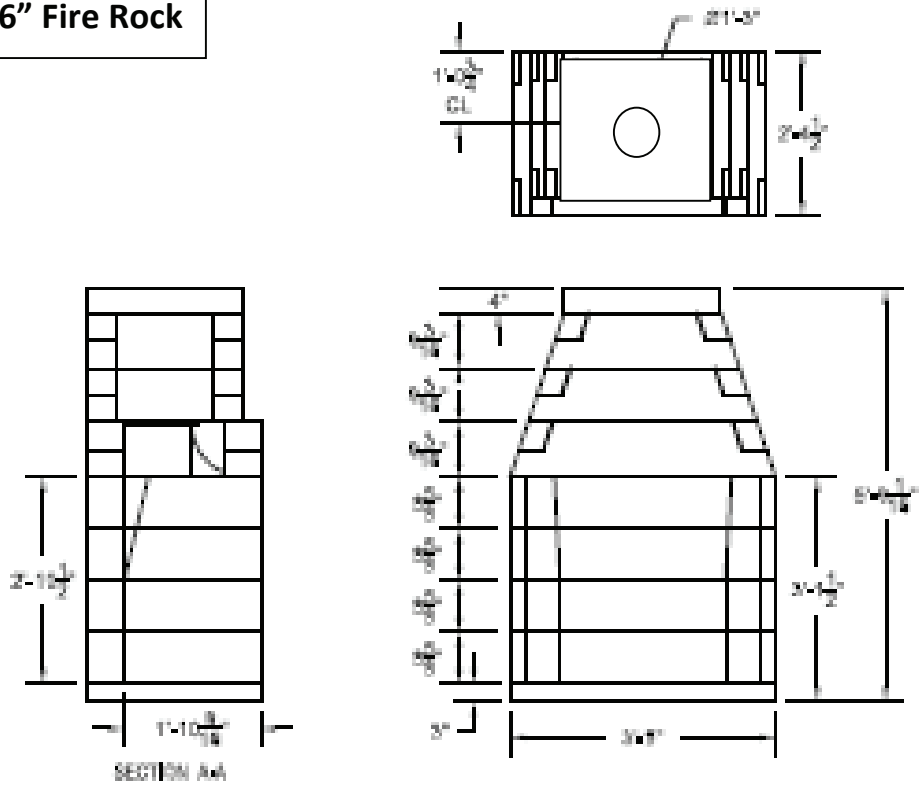

FR 14042 42” Fire Rock

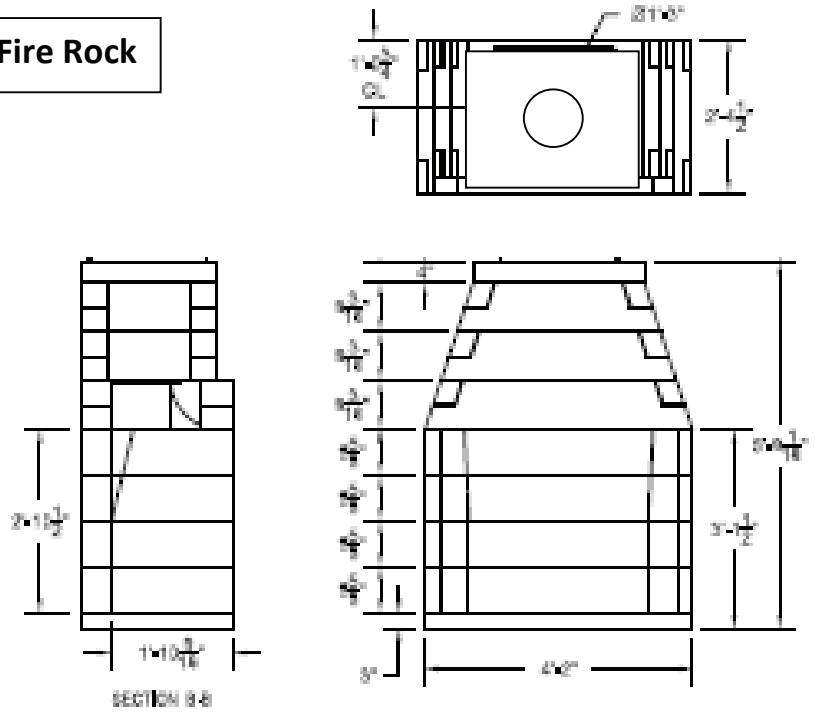

FR 14048 48” Fire Rock

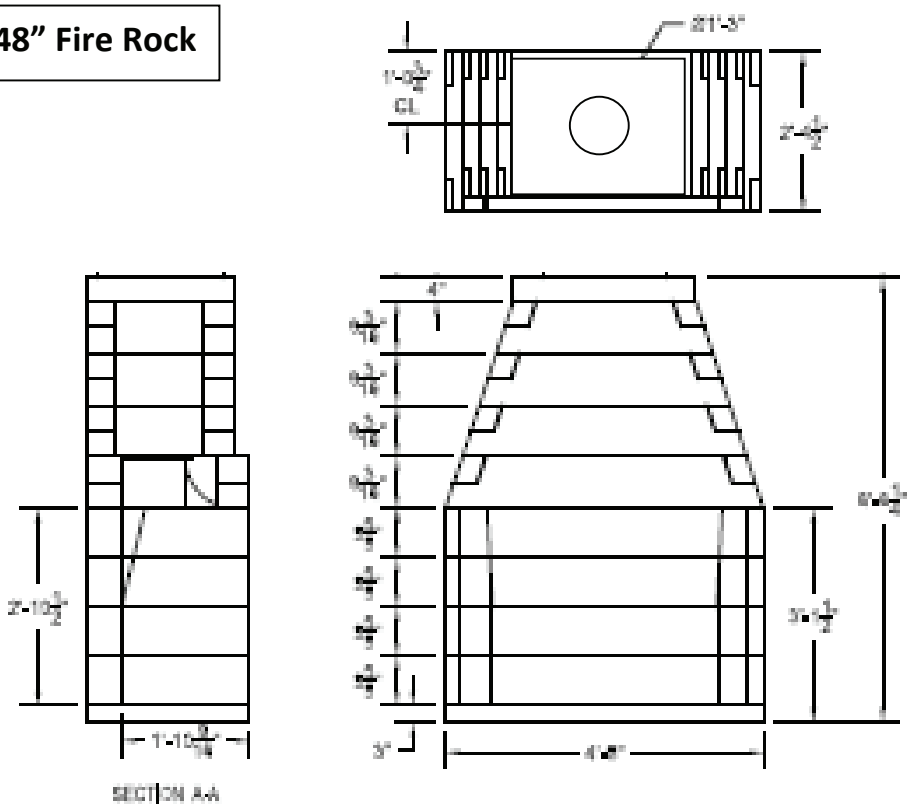

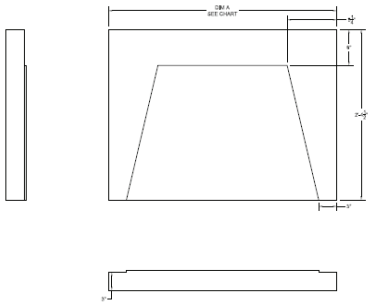

FIREPLACE SIZE	DIM A
32	28
36	32
42	38
48	44

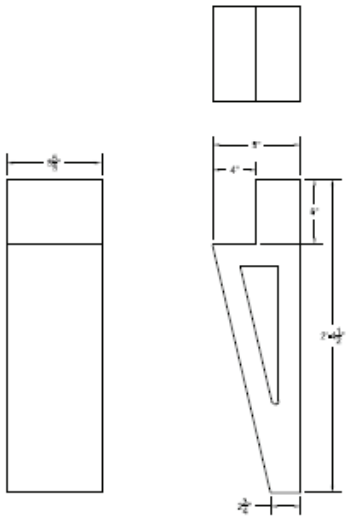

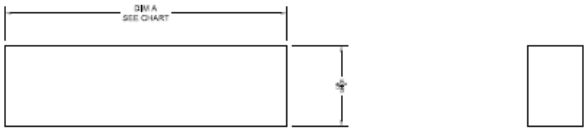

USED ON CONVENTIONAL AND VENT FREE

FIREPLACE SIZE	DIM A
32	35 7/8
36	39 7/8
42	41 7/8
48	47 7/8

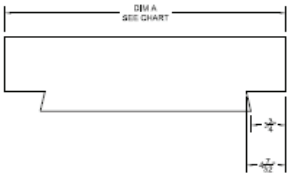

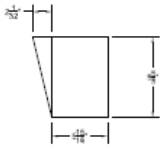

FIREPLACE SIZE	DIM A
32	28 7/8
36	35 7/8
42	41 7/8
48	47 7/8

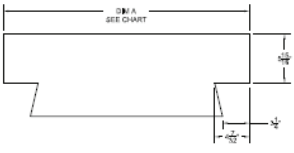

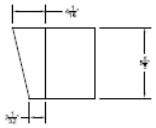

FIREPLACE SIZE	DIM A
32	28 7/8
36	35 7/8
42	41 7/8
48	47 7/8

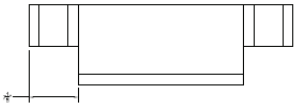

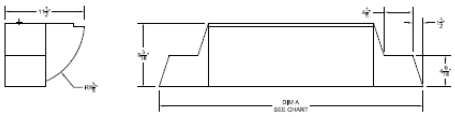

FIREPLACE SIZE	DIM A
32	28
36	32
42	38
48	44

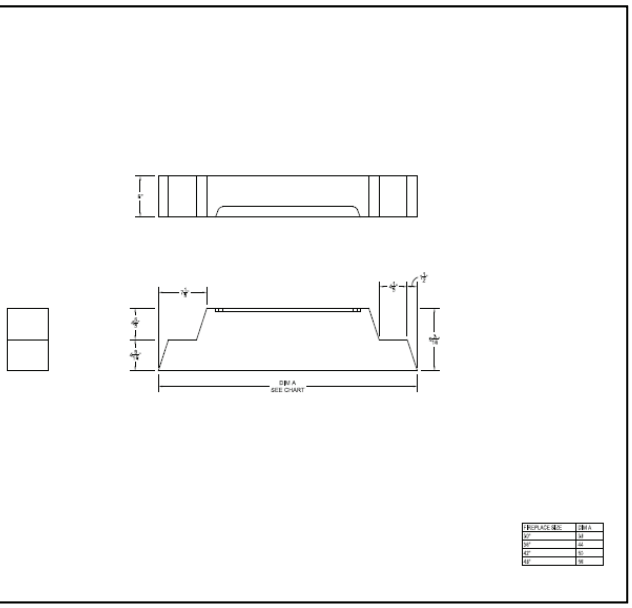

FIREPLACE SIZE	DIM A
32"	34
36"	38
42"	50
48"	56

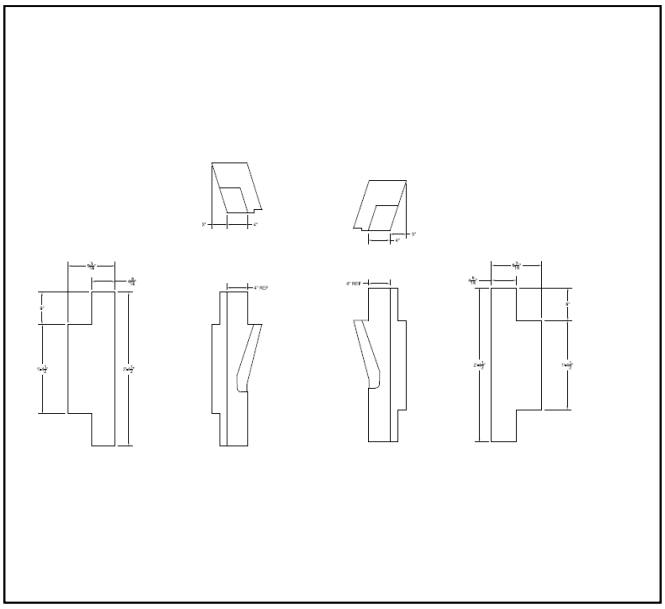

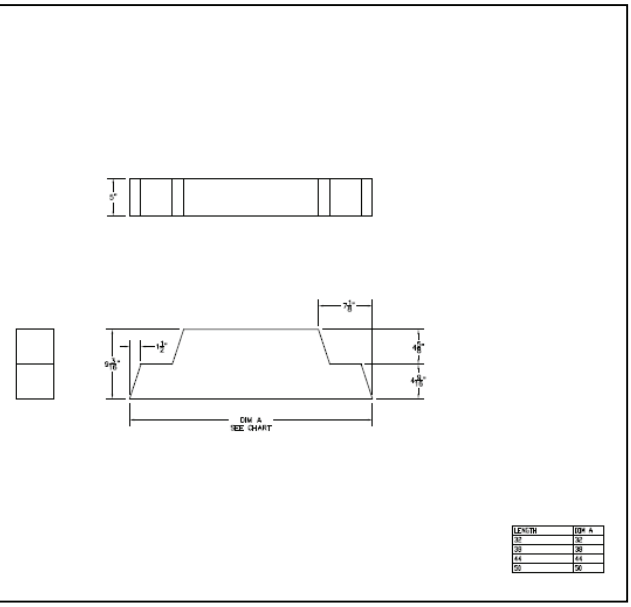

LENGTH	DIM A
32	32
38	38
44	44
56	56

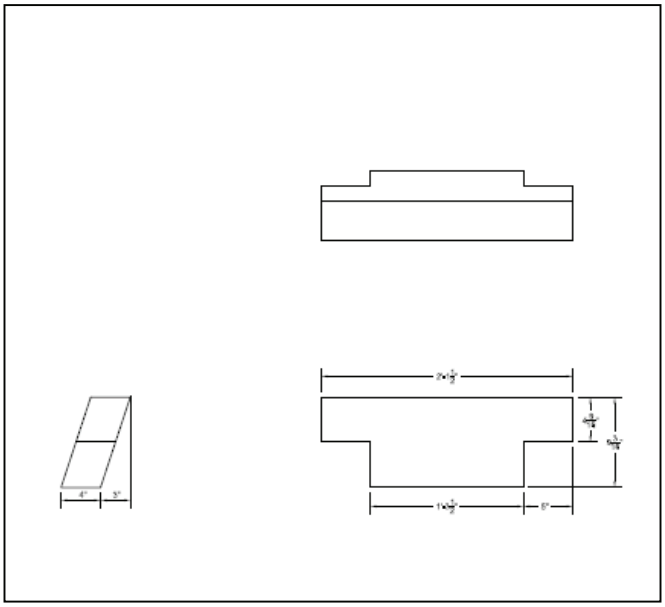

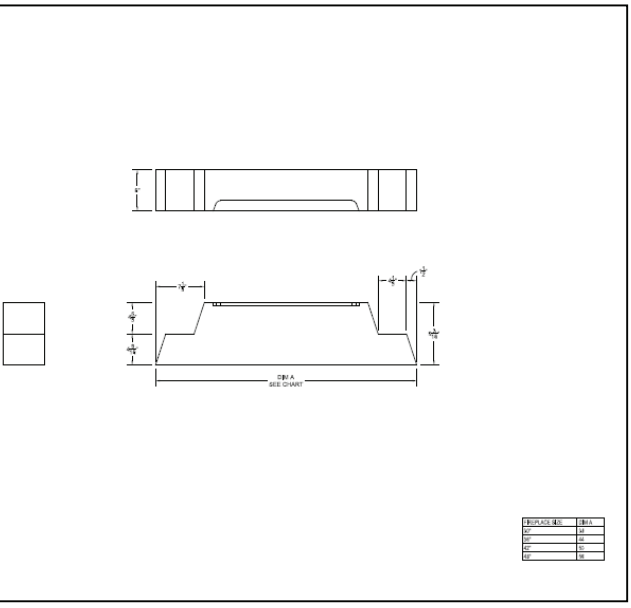

FIREPLACE SIZE	DIM A
32"	34
36"	38
42"	50
48"	56

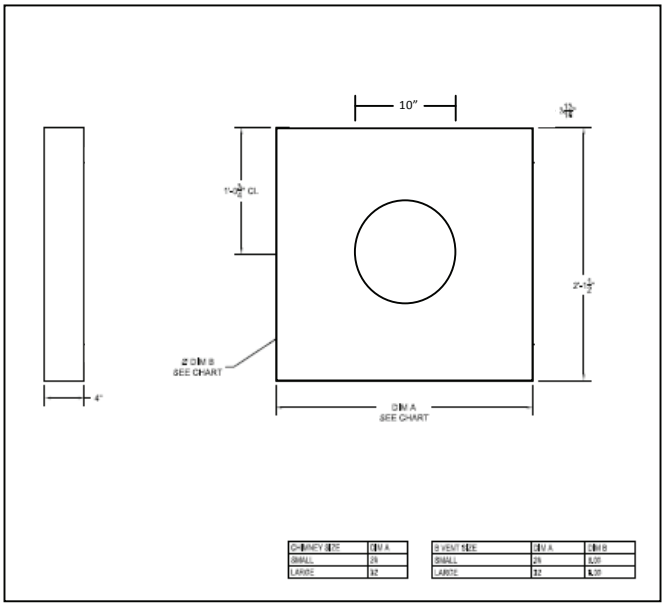

CHIMNEY SIZE	DIM A
SMALL	28
LARGE	32

S VENT SIZE	DIM A	DIM B
SMALL	28	8.25
LARGE	32	8.25

ADDITIONAL COMPONENTS NECESSARY FOR A 14000 SERIES FIREBOX

In addition to the Fire Rock modular masonry firebox and smoke chamber assembly components the Fire Rock 14000 Series requires particular components necessary to complete the installation and meet the ANSI Z-21.60 listing requirements. The pallet of special B-Vent Installation components includes the following:

1) Decorative Gas Log appliance including stadium burner, ceramic logs, and accessories

2) Draft Diverter

3) Chimney Flap Safety Device

4) Safety Shut-Off switch with angle steel

5) Simpson Dura-Vent Draft Hood Connector

6) High Temperature Wiring Harness

7) Burner Anchor Bolts

8) Replacement Chimney Base (masonry)

Remainder of this page intentionally left blank.

REQUIRED CLEARANCES TO COMBUSTIBLES

Important: "Combustibles" are defined as "normal construction materials" and considered to be: wood framing materials, particle board, mill board, plywood paneling, plywood subflooring and wood flooring.
The FR 14000 Series fireplaces are listed for installation with "clearance to combustibles" (shown at Figure 1, below) as follows:
A: Zero inch (0") clearance to the combustible floor;
B: One inch (1") clearance at the FireRock firebox and smoke chamber sides and front ;
C: One inch (1") clearance at the FireRock firebox and smoke chamber back wall ;
D: One inch (1") minimum air space to combustibles at all B-Vent double wall chimney components' outer layer.
CAUTION: Maintain three inches (3") clearance to insulation and vapor barriers from all firebox, smoke dome and B-Vent flue components' outer layer.
Note(s):
1. The FR 14000 is designed, tested and approved for installation directly on a combustible floor system per the installation specifications given in this manual.
2. All FR 14000 installations will result in the minimum finished fire brick floor of the firebox being at least four and one half inches (4-1/2") above the combustible floor system. The FR 14000 is not to be recessed into the combustible floor system.
3. The combustible floor in front of the fireplace must be covered with a noncombustible hearth extension material set tight against the fireplace front and extending at least twenty inches (20") out from the finished front of the fireplace and at least twelve inches (12") beyond the finished sides of the fireplace opening (See page 28).

WARNING: Combustible objects placed in front of the fireplace must be kept to a minimum of forty eight inches (48") clearance to the fireplace opening.

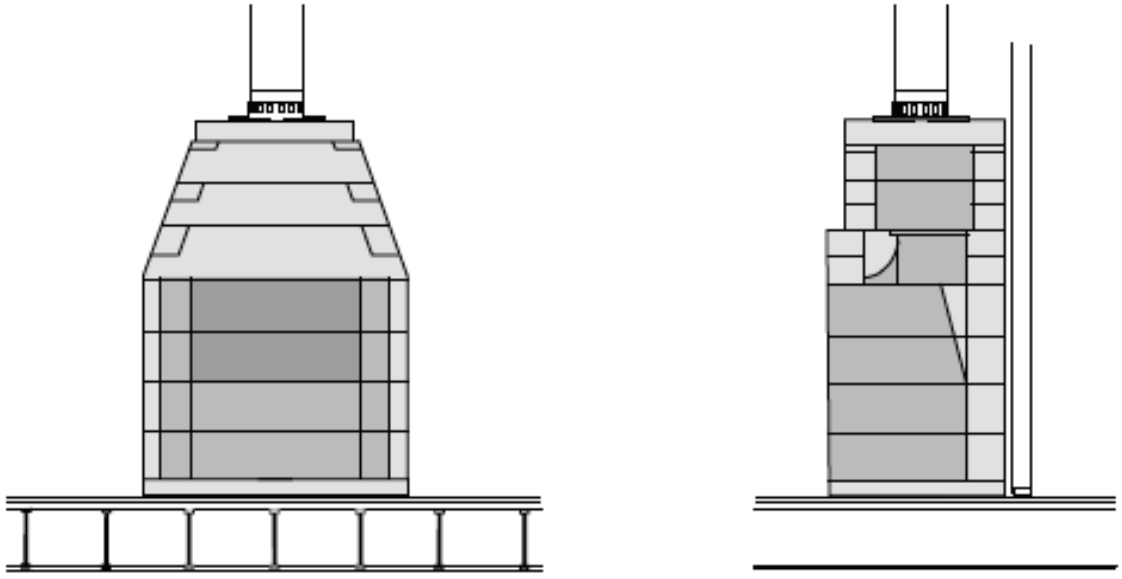

COMBUSTIBLE FLOOR SYSTEM LOADING

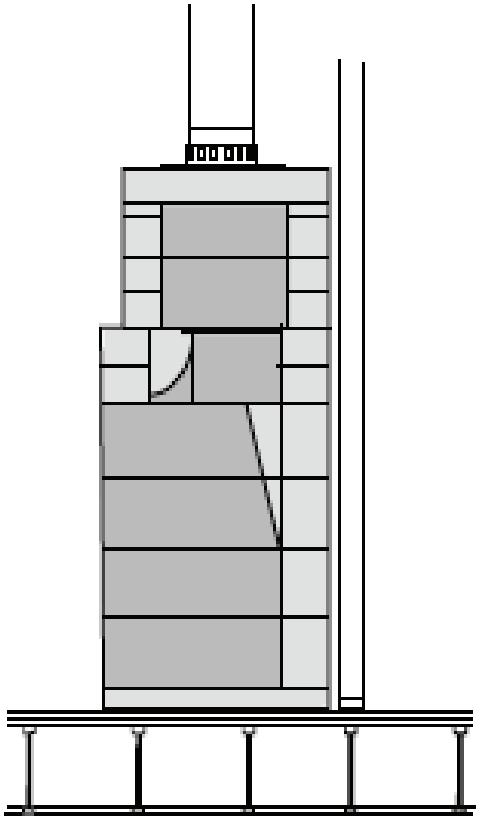

Important: Floor framing for a FR 14000 installation will need to be designed and built to accept substantial dead loads spread over a relative small floor area. The following weights and sizes can be used to calculate loading. It is the contractor's responsibility to provide adequate floor system load capacity.

FR 14000 Series Weights and Load Calculations:

Total dead load amounts include (but are not necessarily limited to) the following items and their corresponding weight estimates as listed below:

1. FireRock unit model weights:

a. FR 14030	30"	1900 lb
b. FR 14036	36"	2100 lb
c. FR 14042	42"	2300 lb
d. FR 14048	48"	2700 lb

2. Approximate weight of log set: 100 lb.

3. Fire brick and mortar: 350 lb.

4. Facing material: per general contractor

5. B-Vent metal flue: per manufacturer

The **floor area** for each model is as follows:

MODEL	WIDTH	DEPTH	AREA
FR 14030	38"	28.5"	7.52 ft^2
FR 14036	44"	28.5"	8.70 ft^2
FR 14042	50"	28.5"	9.90 ft^2
FR 14048	56"	28.5"	11.08 ft^2

Note(s):

1. Fire Rock Products, LLC is not responsible for structural floor support details for this fireplace system. Unless otherwise noted all floor framing drawings in this manual are merely illustrations to indicate the presence of an underlying floor system.

2. Consult your local structural engineer for proper floor system design, sizing and specifications.

ROUGH FRAMING DIMENSIONS

	A	B	C
FR 14030	40”	62”	29 ½”
FR 14036	46”	70 ½”	29 ½”
FR 14042	52”	70 ½”	29 ½”
FR 14048	58”	80”	29 ½”

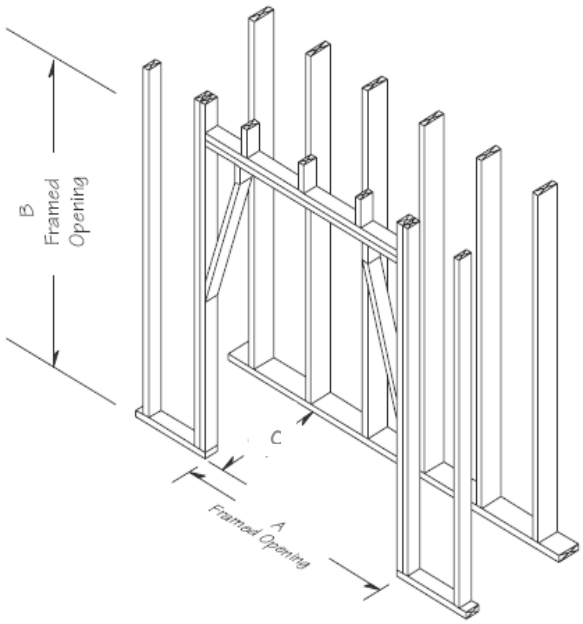

Note(s):

1. “Raised hearth” requires additional rough opening height at “B” equal to the height of the raised hearth detail.
2. Rough framing dimension for depth “C” allows for one inch (1”) clearance at the back of the FR 14000 Series.
3. Keep all insulation and vapor barriers three inches (3”) away from all firebox surfaces.

CORNER LAYOUT

The following chart of plan dimensions is intended to aid in the positioning of an FR 14000 in a corner condition.

	A	B	C	D
FR 14030	40”	49 ½”	28 ¼”	70”
FR 14036	46”	52 ½”	32 ½”	74 ¼”
FR 14042	52”	55 ½”	36 ¾”	78 ½”
FR 14048	58”	58 ½”	41”	82 ¾”

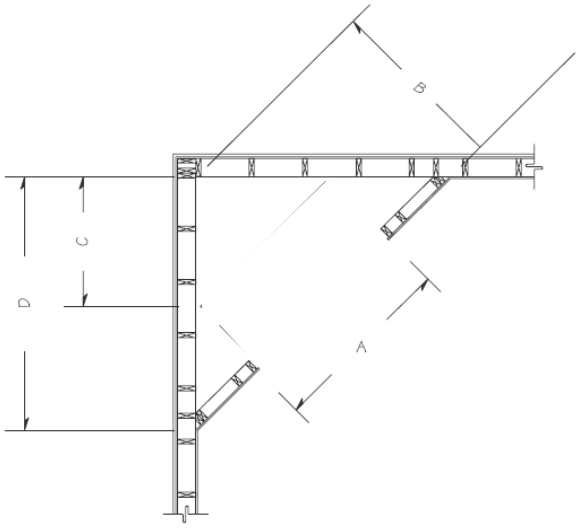

FIREBOX ASSEMBLY

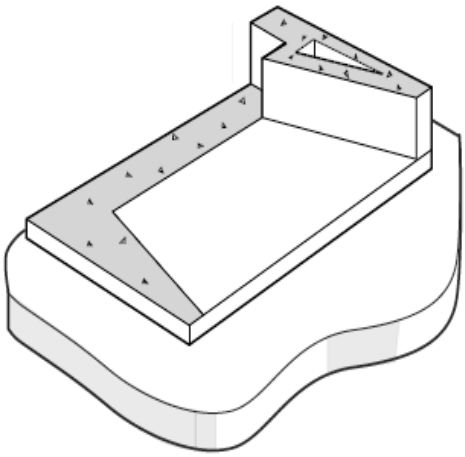

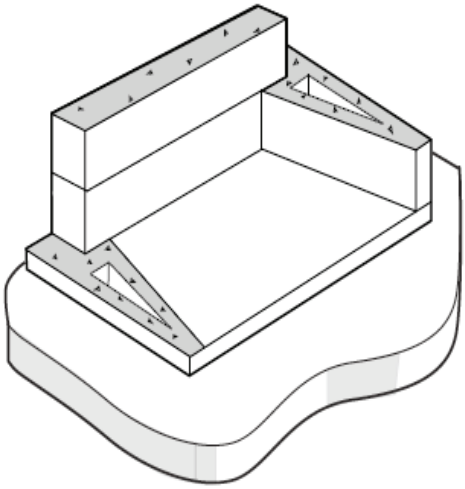

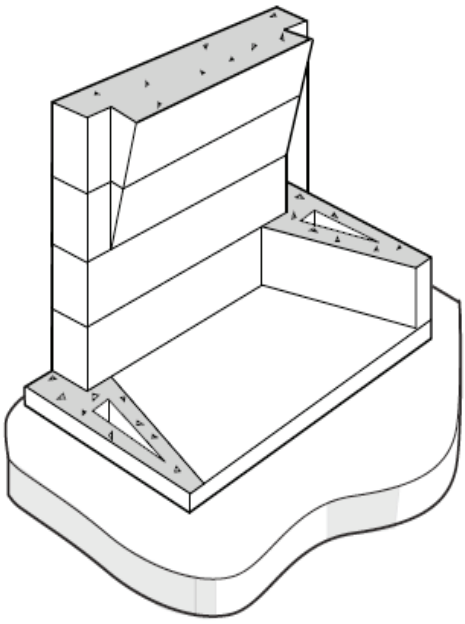

Firebox Assembly

The Fire Rock 14000 Series is designed to sit directly on a combustible surface. You must be sure the floor system is designed to carry the load represented by the firebox, mortar, and firebrick.

Set your baseplate being sure to align it square to the room, properly centered and level. In the event a raised hearth is called for you may use dimensional lumber to build an appropriate riser.

Side and Back wall components are next. Place a bead of Fire Rock Adhesive Mortar at least one (1) inch thick where each surface of each component will lie or butt up against another component. After placing each component the resulting joint should be 1/16th to 1/8th of an inch thick.

Place the blocks as shown in the illustrations on this page, starting with a side block and then positioning the back blocks. Use a level to be sure the firebox is being erected plumb and level.

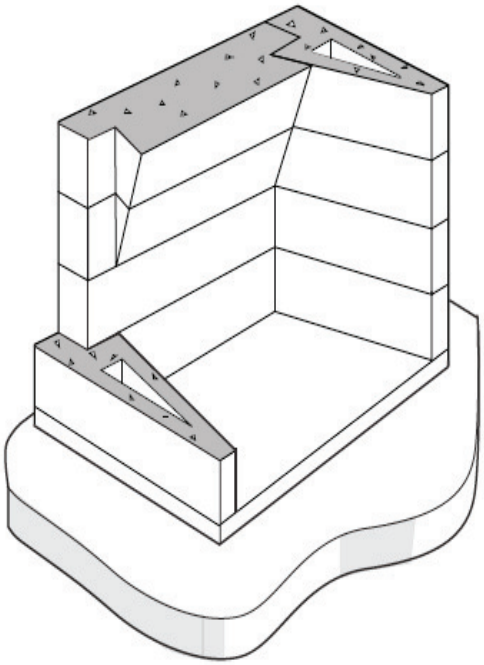

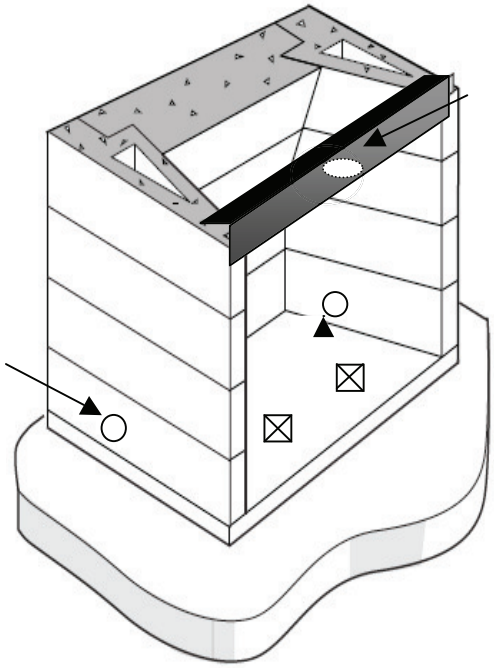

Firebox Assembly

Continue stacking side blocks and back wall components as shown. Be aware that the third and fourth back wall blocks have an angle feature that must match up to form a continuous angle as shown in the illustration.

OPEN THE FIRE ROCK
14000 SERIES PALLET
AT THIS TIME

1) Install the angle steel Safety Shut – Off Switch assembly across the top of the opening angle DOWN and the Safety Switch TOWARD the INSIDE of the firebox..

2) Drill a ¾" hole for the High Temp wiring harness

3) Drill a 1" hole for gas pipe feed.

The holes referenced at "2" and "3" may be on the same side or opposite sides of the firebox.

Line the firebox with firebrick. Leaving the drilled holes exposed.

Find two Burner Pan Anchor Bolts and embed them into the mortar bed under the fire brick lining, (see X's)

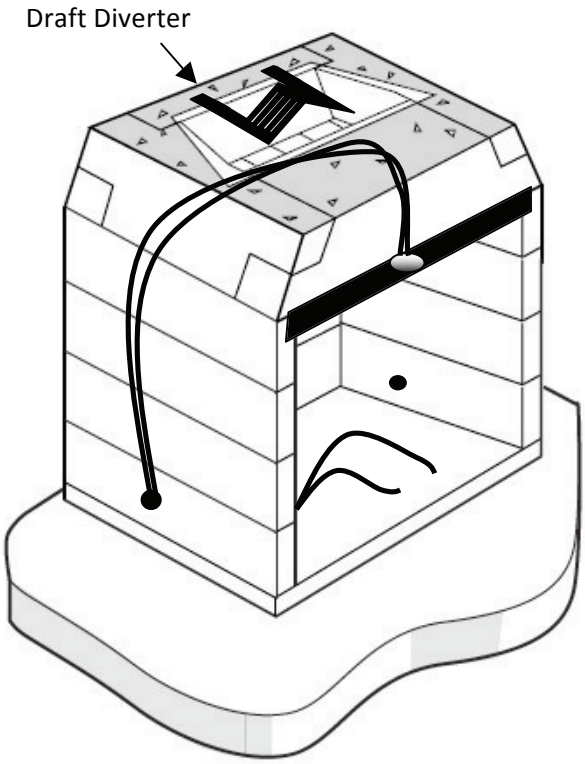

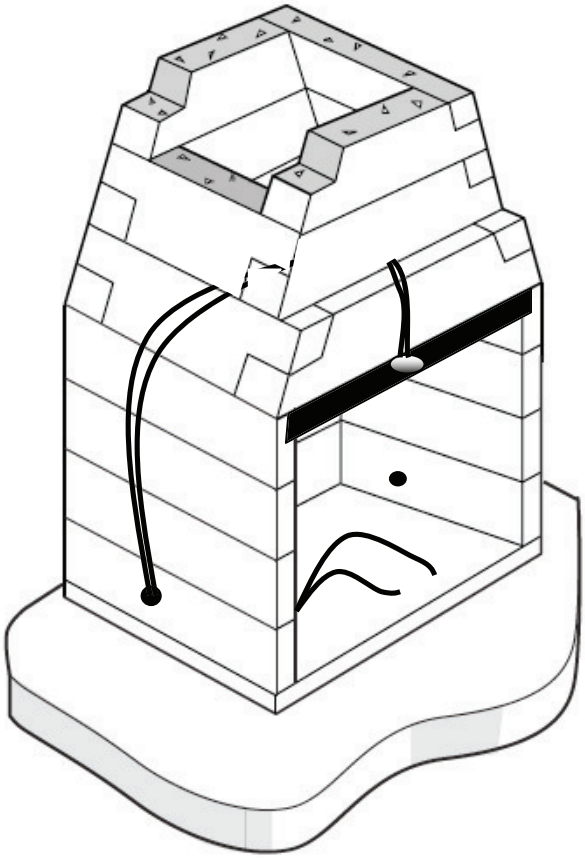

Smoke Chamber Assembly

The first course of smoke chamber is four components including the radius lentil. After setting these four components you will see an indentation that can receive a cast iron, poker operated damper. If you are installing a damper, place it here as follows:

14030	24" Damper
14036	30" Damper
14042	36" Damper
14048	42" Damper

Damper is optional.

At this level the Draft Diverter is mortared between the 1st and 2nd Smoke Chamber course in a way that positions the v-vented portion directly in line with the chimney.

Thread the High Temp Wiring Harness through the first drilled hole in the side of the firebox pass it up along the side of the firebox and across the top of the radius lentil. It is acceptable to embed the wire in the mortar that seals the next component.

Stack the remaining smoke chamber components as illustrated.

Gas Line Installation

A certified gas plumber must run a gas line through the second drilled hole in the side of the firebox for the purposes of supplying natural gas (propane is acceptable) to the gas log appliance.

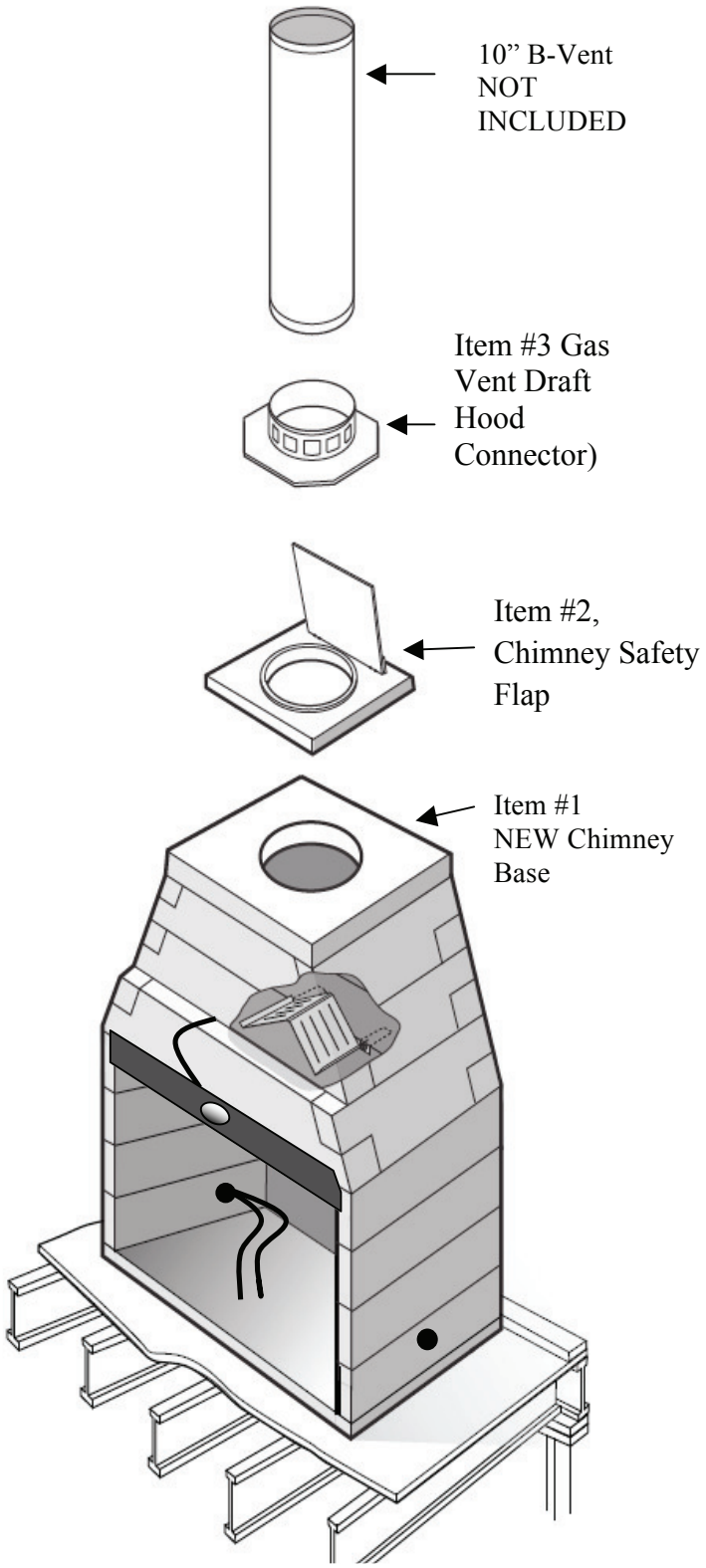

Chimney Assembly

The Fire Rock fireplace kit includes a chimney base which must be discarded and replaced with the chimney base from the Fire Rock 14000 Series pallet (item #1, NEW Chimney Base).

The next step involves two (2) parts from the 14000 Series pallet (Item #2, Chimney Safety Flap and Item #3 Gas Vent Draft Hood Connector) Place the Chimney safety flap into the recess on the top of the NEW Chimney Base, hold the flap open and insert the Draft Hood Connector into the hole. Secure with 3 concrete screws.

At this point please follow the instructions provided by the specific B-vent chimney you have chosen.

B-Vent Chimney

Fire Rock Products, LLC recommends the use of Simpson Dura-Vent Model DVR (Round) Type-B Gas Vent. It is not necessary to use this product to comply with this instruction manual or to comply with the ANSI Z21.60-2007 standard. It is necessary to use a listed (Standard, ANSI Z223.1) Type B gas vent.

Included on the next pages is the Installation Manual for the Simpson Model DVR chimney. While there are references to different sizes of chimney or applications outside of the Fire Rock 14000 Series it must be noted that ONLY 10" ID Type-B gas vent used as described in this manual is approved for the purposes of installing a Fire Rock 14000 Series fireplace.

The installation manual must be followed exactly, whether Simpson Dura Vent Type B gas vent is used or another manufacturer's Type B gas vent is used.

MODEL DVR (ROUND) TYPE-B GAS VENT INSTALLATION INSTRUCTIONS

MH6357

Read through all of these instructions before beginning your installation. Failure to install as described in these instructions will void the manufacturer's warranty and may have an effect on your homeowner's insurance and UL listing status. Keep these instructions for future reference.

REFERENCES

(1) National Fuel Gas Code, also referred to as NFPA 54 and ANSI Z223.1

(2) Simpson Dura-Vent's Sizing Handbook, available from Simpson Dura-Vent

CONTENTS

GENERAL INFORMATION

Type B Gas Vents are for venting listed Natural Gas or Liquid Propane Category I appliances only. The appliances listed below typically (but not always) use Type B vent systems.

Boilers	Furnaces
Water Heaters	Unit Heaters
Room Heaters	Duct Furnaces
Floor Furnaces	Decorative Gas Appliances

Simpson Dura-Vent Type B Vent Systems may be used on other gas-burning appliances, provided the manufacturer of the appliance states in their installation instructions that Type B-vent is acceptable. **Do not** use Type B Vents for Category

II, III, or IV gas appliances. Type B Vent **shall not** be used to vent flue products from incinerators, combination gas/oil appliances, oil-fired, or wood-burning appliances. If there is a question about the use of Type B Vents, contact the appliance manufacturer or Simpson Dura-Vent's Engineering Department for further information.

PLANNING

1. **Appliances**. Carefully review the appliance manufacturer's installation instructions for positioning the unit, any special venting or connector requirements, and verify that it is a Category I appliance or an appliance that requires the use of Type B gas vent.

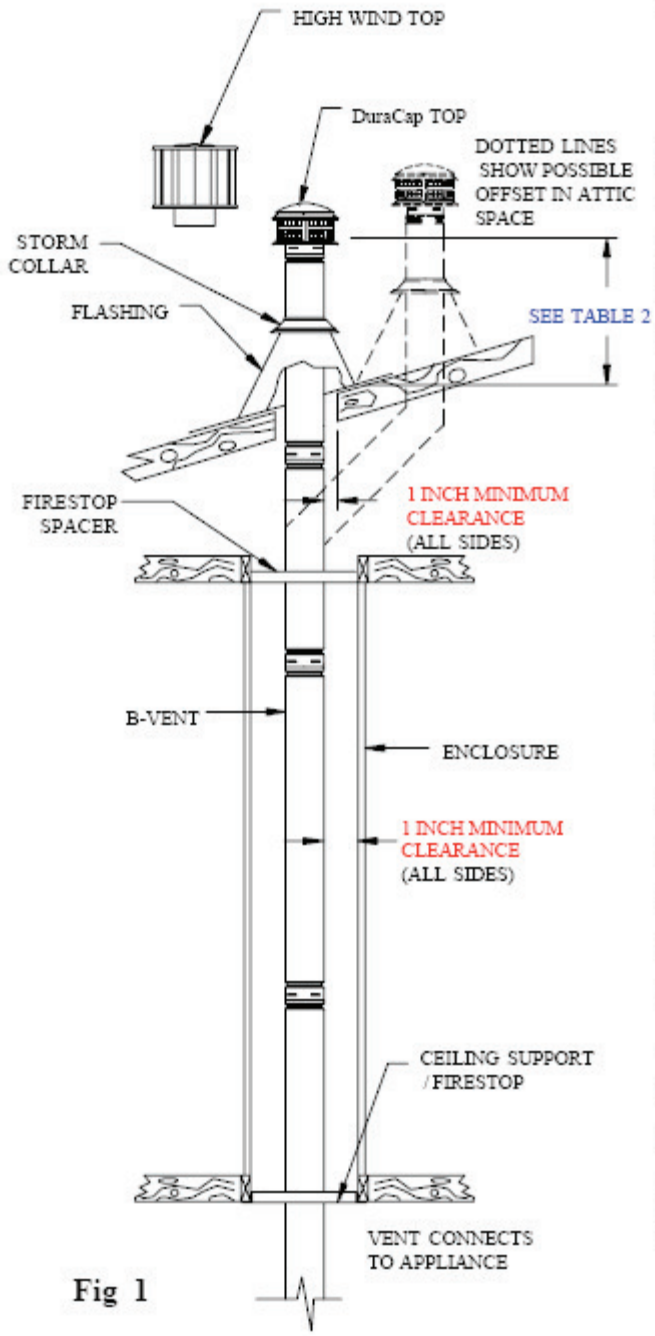

Fig 1

2. **Placement**. The placement of the vent and fittings must be in accordance with Local Codes, as well as accepted venting practices. If more than one appliance is to be connected to one venting system, the common vent must be correctly sized. It is a good idea to make a sketch of the proposed installation, labelling the components you will need. **Adjustable Pipe Lengths** are available to make up odd lengths. Minimize the number of turns and lateral runs, as the National Fuel Gas Code places limitations on these. A 45° turn is preferable to a 90° turn. The appliance reference material should be consulted at this time, as well as any Local Authority having jurisdiction. In most localities, building permits are required for any new appliances, or modifications to existing venting systems.

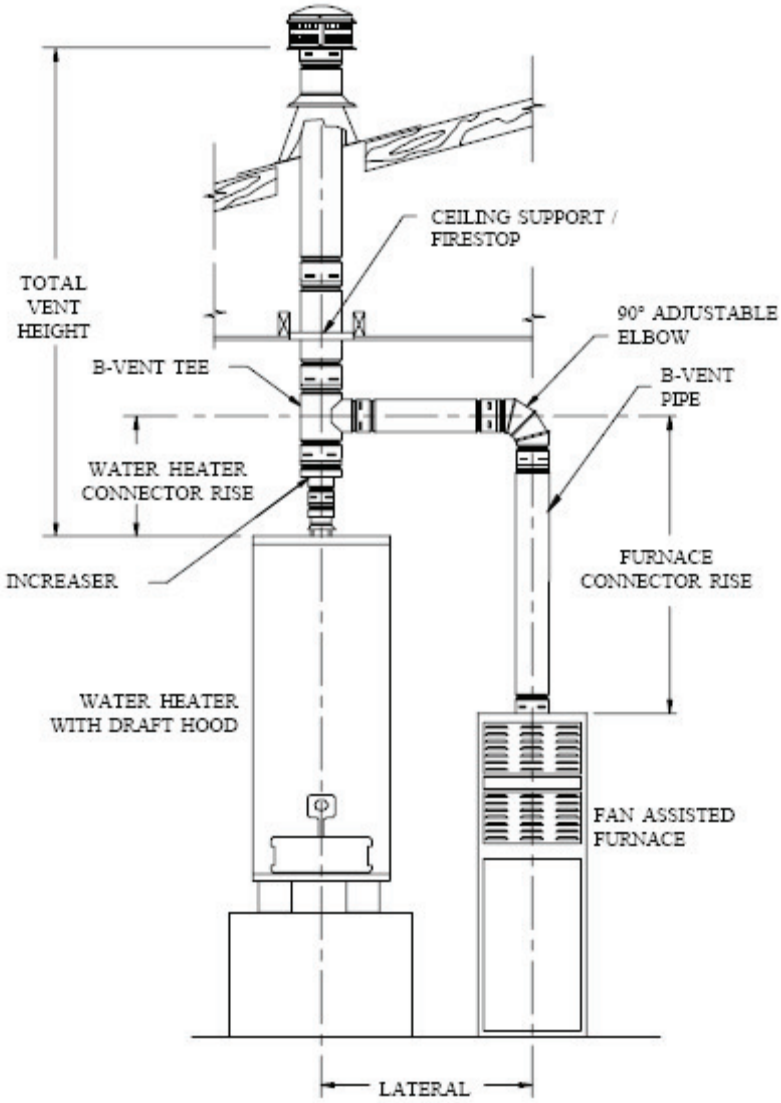

Fig 2

3. Figures 1, 2, & 3 show examples of some **typical residential installations**.

4. **Clearance to Combustibles. A 1-inch clearance (air space) to combustible materials must be maintained, when using Simpson Dura-Vent Round B-Vent, regardless of the pipe diameter.**

5. **Combustion Air**. Refer to appliance installation instructions and local building codes to ensure compliance with required volume of combustion air for each appliance installed .

6. **Slope**. If the venting system contains lateral (horizontal) components, they shall be positioned so they have an upwards slope away from the appliance of not less than 1/4-inch rise per foot of run. (Horizontal vent installed in attics, unconditioned area, or between floors have further restrictions, please consult your local building codes for specific limitations.)

7. **Termination Area**. Examine the area where the vent system will terminate. The height of the termination above the roof is determined by the roof pitch, and also it's proximity to adjacent walls or obstructions. Consult Table 2 on page 9 for proper termination height requirements. Vent pipe with 3"-12" diameter must terminate at least 2 feet higher than an adjacent wall or obstruction, if it

is within 8 feet. Vent pipe with 14" or larger diameter must terminate at least 2 feet higher than an adjacent wall or obstruction, if it is within 10 feet.

8. **Connector Rise**. Plan a minimum of one foot vertical connector rise coming out of each appliance.

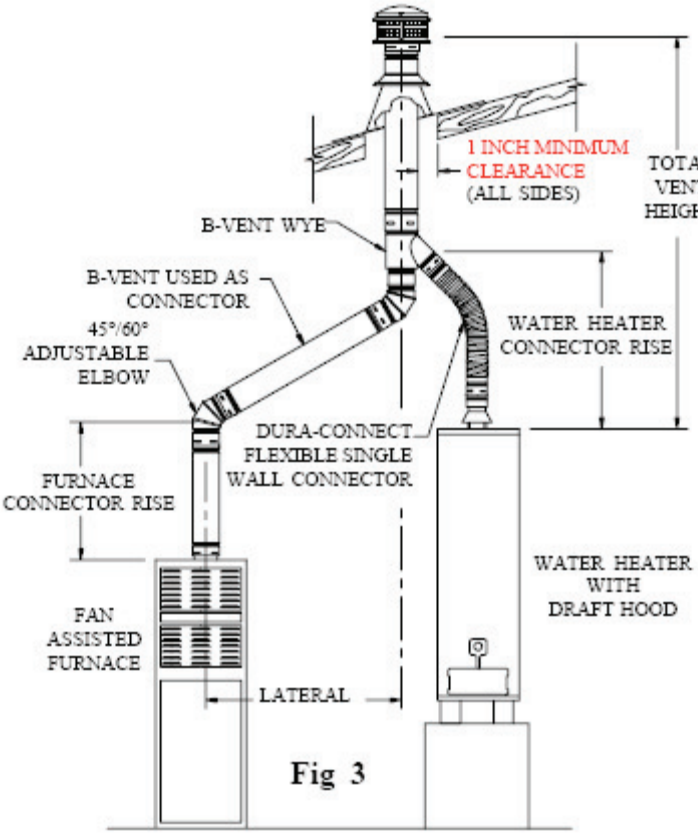

Fig 3

Dura-Connect installation procedures are contained in a separate instruction, obtainable from your Dura-Vent Dealer, or from Simpson Dura-Vent. The clearance to combustibles for Dura-Connect is one inch. It may not be used to pass through walls or ceilings, nor may it be placed in attics or crawl spaces. It may be used wherever single wall connector pipe is used.

STEPS FOR TYPICAL INSTALLATION

1. **Location**. Building Code requires the appliance(s) to be located as close to the vent as possible. After consulting the local codes, appliance installation instructions and any other applicable reference material determine the optimum location for the appliance(s).

2. **Penetration Point**. Locate and mark the center of the penetration point through the ceiling or the wall. Refer to Step 3 or 4, as appropriate.

3. **Ceiling Support**. For a ceiling supported system, install the **Square Firestop/Support** as shown in Figures 6, 7, and 8. The **Firestop Support** must be framed in and the dimensions are shown in Table 1 and shown in Figure 4.

Table 1

PIPE SIZE	STOCK NUMBER OF CEILING SUPPORT	FRAMED INSIDE DIMENSIONS (X & Y) FIG 4
3 INCH	1440	7-3/8" X 7-3/8"
4 INCH	1441	7-3/8" X 7-3/8"
5 INCH	1442	9-1/8" X 9-1/8"
6 INCH	1443	9-1/8" X 9-1/8"
7 INCH	1444	11-1/8" X 11-1/8"
8 INCH	1445	11-1/8" X 11-1/8"
10 INCH	1446	13-1/8" X 13-1/8"
12 INCH	1447	13-1/8" X 13-1/8"

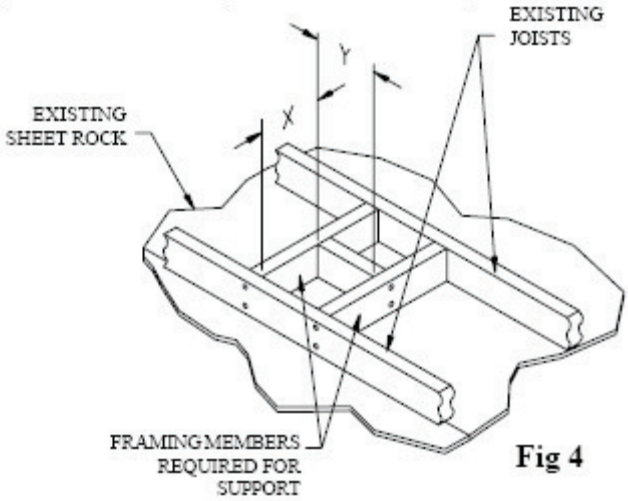

Fig 4

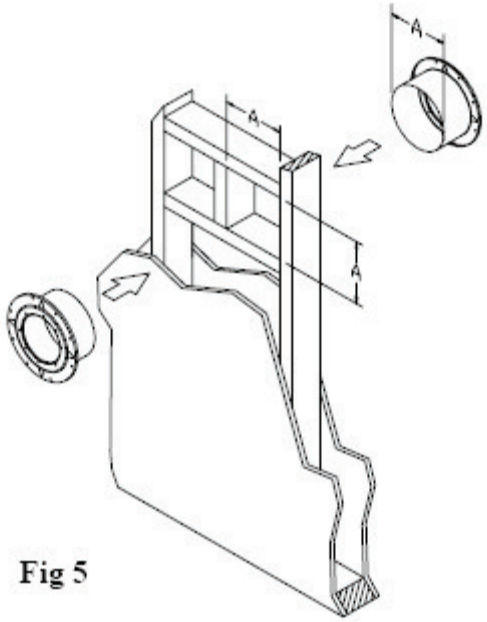

Fig 5

Firestop Supports are currently manufactured for pipe sizes of 3" through 12" only. Larger sizes may be locally fabricated from sheet metal, provided that the mandatory 1-inch clearance is maintained, the pipe is adequately supported, and the installation is acceptable to Local Authorities. In multistory buildings, a **Firestop/ Spacer** must be provided at every floor /ceiling level other than the first floor which requires a support.

4. **Wall Thimble**. For a through-the-wall system, install the **Wall Thimble**, as shown in Figure 5. The **Wall Thimble** is designed to accommodate walls up to 6 inches thick. If you have thicker walls, a sleeve extension should be fabricated and attached to the existing sleeve . Do not fill the air space between the B-vent **Pipe Section** and the **Wall Thimble** with insulation, although an RTV-type sealant may be applied around the flange and nail heads if desired.

5. **Pipe Assembly.** Sections of Simpson Dura-Vent round pipe are joined together by lining up the female end of the locking lug with the male end slot, pushing them together, and turning clockwise to twist lock. Refer to Figure 9. Sheet metal screws are not needed for 3" through

be used in many applications when a B-Vent connector is not required.

7. **Elbows.** When **Elbows** are required, strap the **Pipe Sections** and/or **Elbows** in place using **Wall Straps**. Support the offset so that the weight of the offsetting pipe is not bearing down on the elbows, as shown in Figure 10.

8. **Tees and Wyes. Tees** and **Wyes** are used to combine connectors from 2 or more appliances into a common vent as shown in Figures 2 and 3. A **Tee** should be used in a through-the-wall application, (Figure 11), as they have a removable **Tee Cap** (available as a separate item) attached to the bottom. This **Tee Cap** may be removed in order to inspect the system, or to clean out debris or collected condensate from the common vent. **Wall Straps** should be used to support the vertical pipe as needed to provide a secure installation. **Wall Straps** every four feet are recommended.

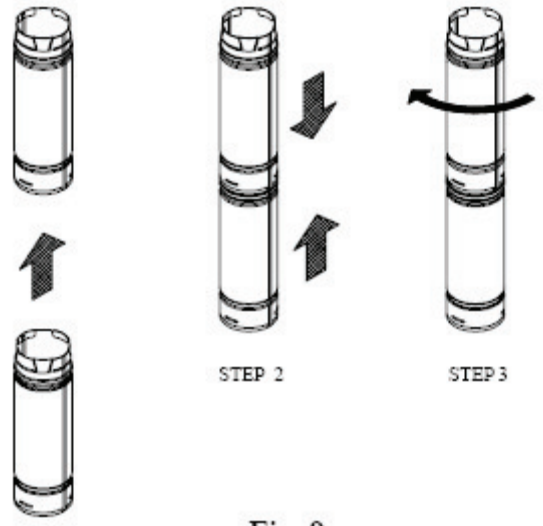

Fig 9

9. **Enclosures.** Any portion of the vent which passes through an occupied area must be enclosed, to prevent accidental damage to the system, as well as burns. Figure 1 (page 2) shows a system which passes through an occupied second floor. Simpson Dura-Vent does not recommend installation of B-Vent Pipe on the outside wall of a building, particularly in cold climates. If it is necessary to do this, enclose the outside portion of the system in a chase, as shown in Figure 11. It would be wise to consult the Local Authority prior to construction. Note that the enclosure requires an access door for inspection and maintenance purposes.

Fig 10

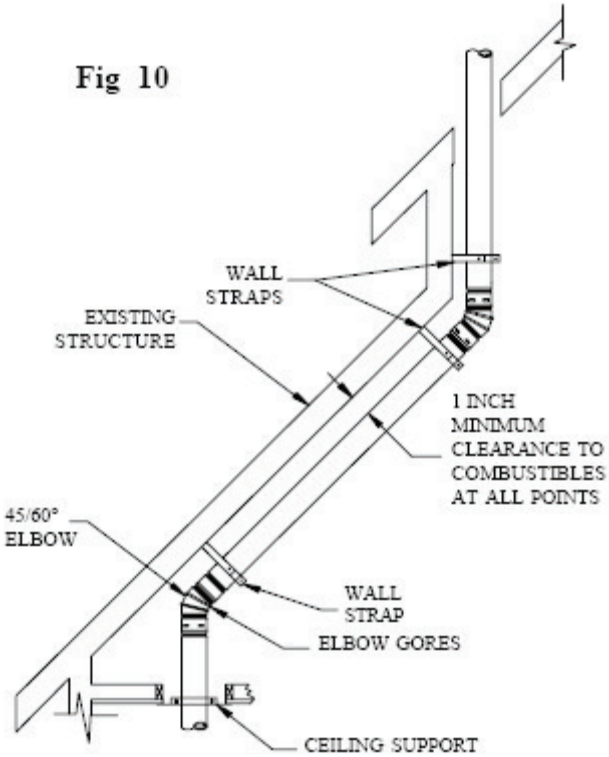

10. **Terminations.** Where the **Pipe Sections** pass through the roof, a hole must be cut to provide a minimum

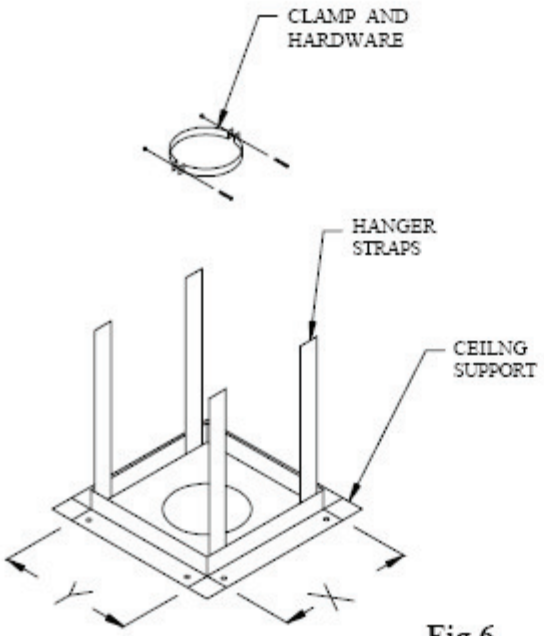

Fig 6

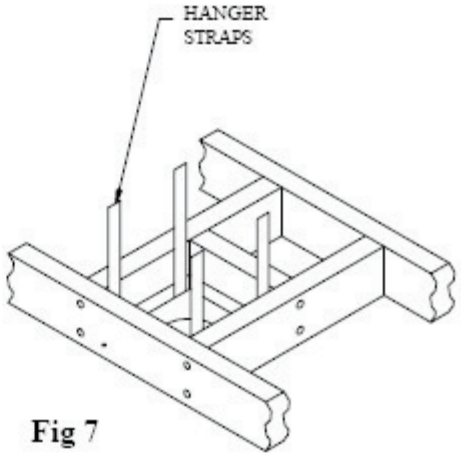

Fig 7

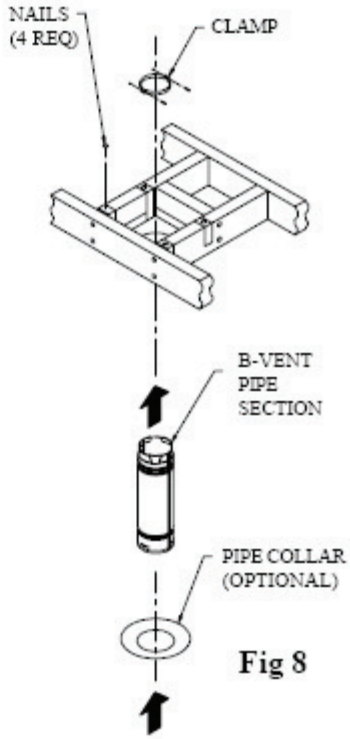

Fig 8

8" diameter pipe. However, if desired, use 1/4-inch long sheet metal screws for 3" through 8" diameter pipe. **Never** penetrate the inner liner with screws. For 10" through 16" diameter pipe, Simpson Dura-Vent recommends using a minimum of (4) 3/8" sheet metal screws per joint, and a minimum of (6) 3/8" sheet metal screws per joint for 18" and larger diameters. Each **Pipe Section** is labelled, and an arrow shows the direction of the exhaust flow. For ceiling supported installations, place a **Pipe Section**, or assembled **Pipe Sections**, through the hole in the **Square Firestop Support**, and tighten the **Clamp**. The **Clamp** will rest inside the **Ceiling Support**, and prevent the **Pipe Sections** from dropping down. The **Pipe Section(s)** should protrude a minimum of one inch below the ceiling. An optional **Pipe Collar** is available for decorative purposes.

6. **Connectors.** Only Simpson Dura-Vent **connectors** should be used between the appliances and the venting system. Some appliances require **Type B-Vent** as a complete dedicated system from the flue collar of the appliance to the termination of the vent to the outside atmosphere. Simpson Dura-Vent's listed flexible, single-wall corrugated aluminum connector, called "**Dura-Connect**" can

clearance (air space) of 1 inch between the **Pipe** and construction materials. Straight lengths of **pipe** are run up above the roof. (see table 2) A **Roof Flashing** is placed down over the **pipe**, and adjusted so it fits tightly against the roof, with the **Pipe Section** held in a position maintaining the 1 inch minimum clearance from combustibles. The **Flashing** is then nailed to the roof. The roofing material (shingles, asphalt paper, etc.) should overlap the top edge (uphill side) of the **Flashing**. A non-hardening sealant should be used around the edges of the flashing base where it meets the roof, as shown in Figure 12. Non-hardening sealant is placed around the joint between the **Flashing** and the vertical **Pipe Section** and the **Storm Collar** is then placed over this joint, to make a watertight seal. Add sufficient **Pipe Sections** to attain the height specified in Table 2. To connect the Top to the pipe, hold Top by its collar, slide collar over locking lugs of pipe, and twist-lock clockwise. **Tops** of diameters greater than 16 inches do not twist-lock, but are affixed with sheet metal screws.

11. **Inspection**. This com-

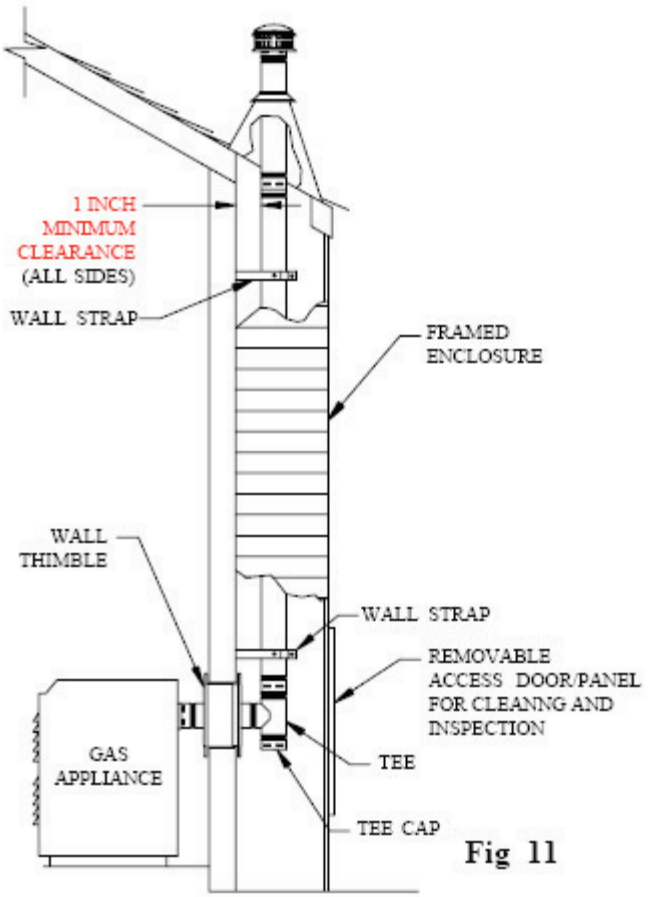

Fig 11

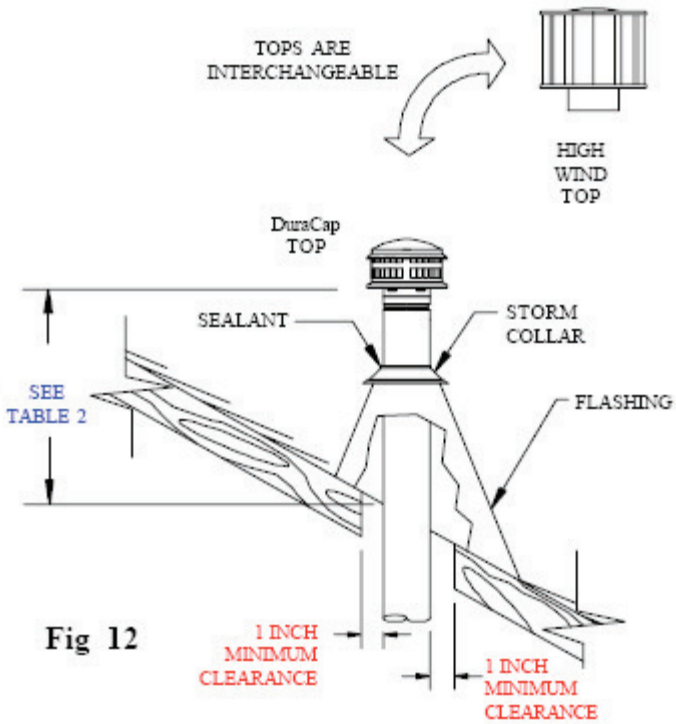

Fig 12

pletes the installation steps. Conduct a final inspection to insure that all joints are secure, the system is properly supported, and is mechanically sound. Especially verify that the **one-inch clearance to combustibles** requirement has been met, and that adequate combustion air will be furnished to the appliance.

GAS VENT SYSTEMS USING VENT CAPS LISTED BY UNDERWRITER'S LABORATORIES MAY TERMINATE IN ACCORDANCE WITH THIS VENT TERMINATION TABLE		
ROOF PITCH	MINIMUM HEIGHT	
	FEET	METERS
FLAT TO 7/12	1	0.3
OVER 7/12 TO 8/12	1.5	0.46
OVER 8/12 TO 9/12	2	0.61
OVER 9/12 TO 10/12	2.5	0.76
OVER 10/12 TO 11/12	3.25	0.99
OVER 11/12 TO 12/12	4	1.22
OVER 12/12 TO 14/12	5	1.52
OVER 14/12 TO 16/12	6	1.83
OVER 16/12 TO 18/12	7	2.13
OVER 18/12 TO 20/12	7.5	2.29
OVER 20/12 TO 21/12	8	2.44

Table 2

BUCKET SUPPORT

1. **Description.** The **Bucket Support** (shown in Figure 13) is for properly supporting the B-vent between 16 or 24-inch O.C. joists or rafters, or for providing a transition fitting between **Dura-Connect Single Wall Connector** and the B-vent **Pipe Sections**. A maximum of 20 feet of Type B Gas Vent may be supported. Note that the Bucket Support must be installed prior to the sheetrock.

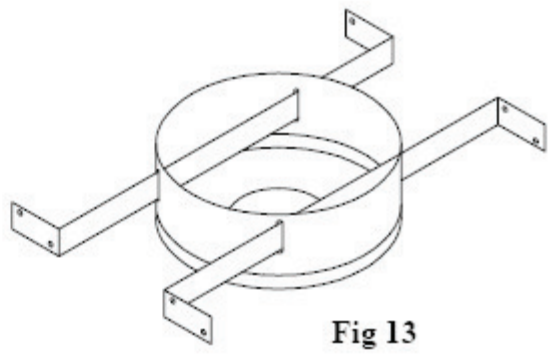

Fig 13

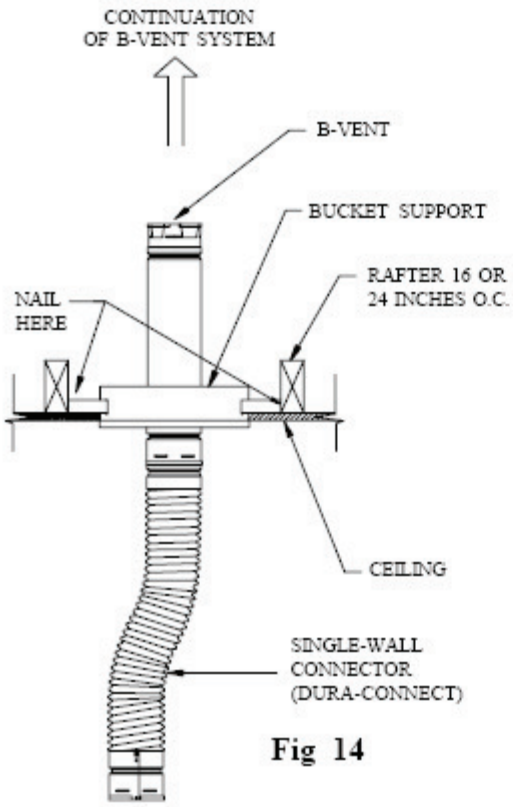

Fig 14

2. **Assembly**. After you have determined where the B-vent should be located, assemble the **Bucket Support** and **Brackets**. Nail the assembly to the bottom side of the joist material as shown in Figure 14. After the **Support Bucket** is in place, scribe and cut out a hole in the sheet rock 1/8" larger than the diameter of the **Bucket,** and

nail into place. Run the **Pipe Sections** through the hole in the **Bucket Support**, connect the **Dura-Connect Single Wall Connector**, and attach the **Clamp** so that it rests inside the **Bucket,** and will support the **Pipe**. Adjust the **Pipe** to the desired height and tighten the **Clamp**. This will provide a complete engineered support system.

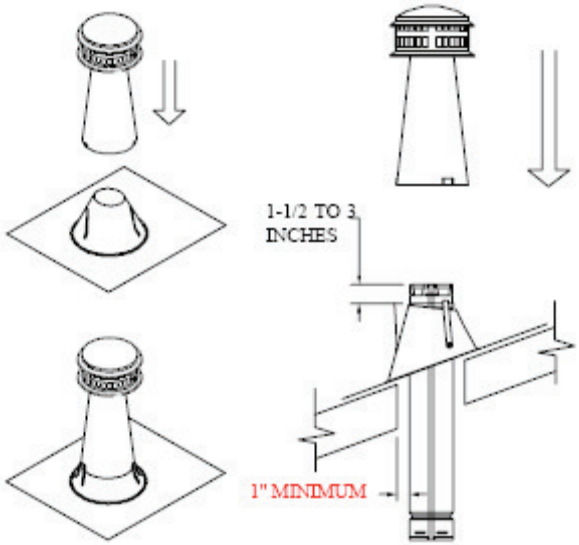

Fig 15 Fig 16

COMBINATION TOP

1. **Description**. The **Combination Top**, provides an easily installed, safe and efficient B-Vent **Top** and **Flashing**, as one lightweight unit. The two basic components and the assembled unit are shown in Figure 15. The **Combination Top** is designed to accommodate roof pitches from flat to 6/12, and is available for 3" through 6" diameter B-Vent pipe.

2. **Location.** Locate the point in the underside of the roof where the system is to penetrate, using a plumb bob or level.

3. **Hole**. Remove sufficient roofing material to cut a hole in the roof which will allow a minimum of 1 inch air space between the B-Vent and combustible roofing materials.

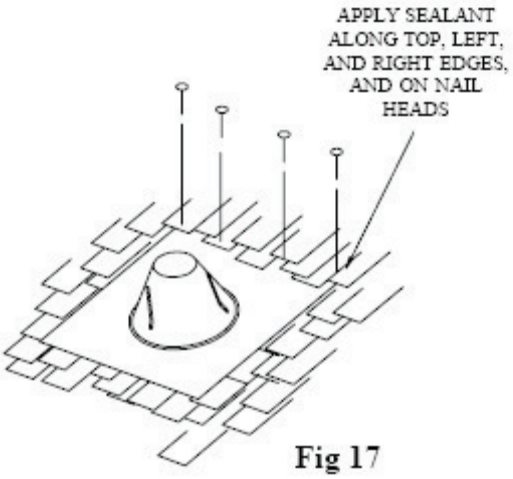

Fig 17

4. **Flashing**. Position the **Flashing** so the hole is directly over the end of the pipe, as shown in Figure 16. Run the top edge of the **Flashing** under the roof covering, nail as required,

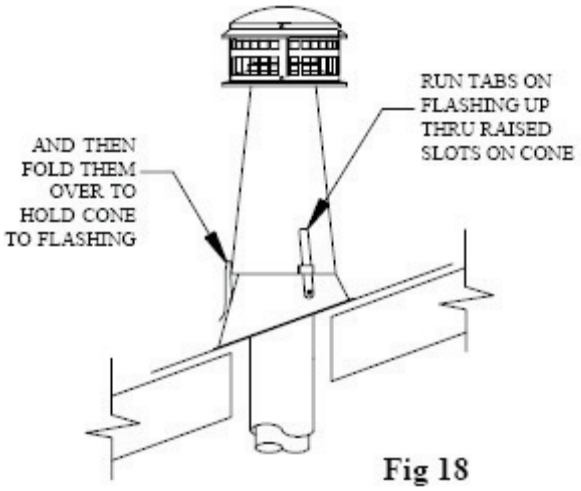

Fig 18

and seal with a non-hardening sealant, as shown in Figure 17. Seal all nail heads.

5. **Height.** Add sufficient **Pipe Sections** of B-Vent until the system terminates 1-1/2" to 3" above the collar of the **Flashing** as shown in Figure 16.

6. **Top Cone**. Slip the **Top Cone** over the **Flashing**, so the vertical straps on the **Flashing** coincide with the slots at the base of the **Cone**. Slip the straps up through the slots as shown in Figure 18. Adjust the **Top Cone** to a generally vertical position. Holding the **Top Cone** in position, bend the straps down as shown.

7. This completes the installation. Conduct a final inspection of the job to insure proper joints, correct procedures, sealed nail heads, etc.

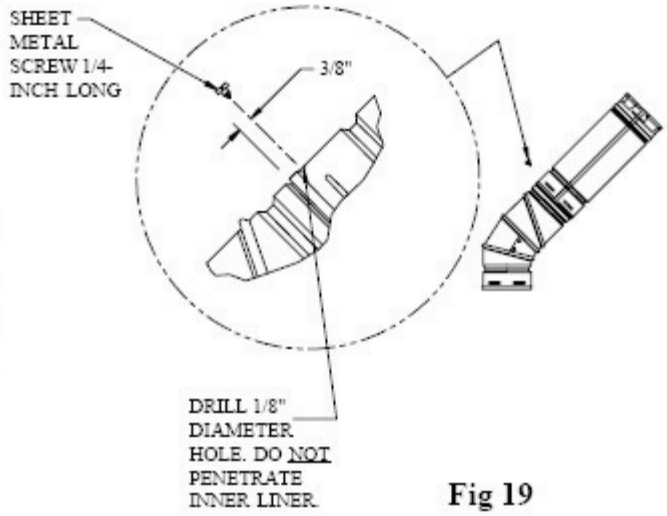

Fig 19

ADJUSTABLE ELBOWS

1. **Purpose.** This section furnishes supplemental information concerning **Adjustable Elbows,** both 90° and 45°/60°.

2. **Connections.** In addition to twist locking the elbows, the connection may be further secured by using sheet metal screws at the joint where the male and female parts overlap, provided that the screws do not penetrate the inner liner as shown in Figure 19. One screw per joint is normally sufficient. Use #8 Pan Head sheet metal screws which are no longer than 1/4 inch. Liberal use of **Wall Straps** for additional support is recommended. Do not allow the weight of the offsetting pipe to bear down on lower elbow.

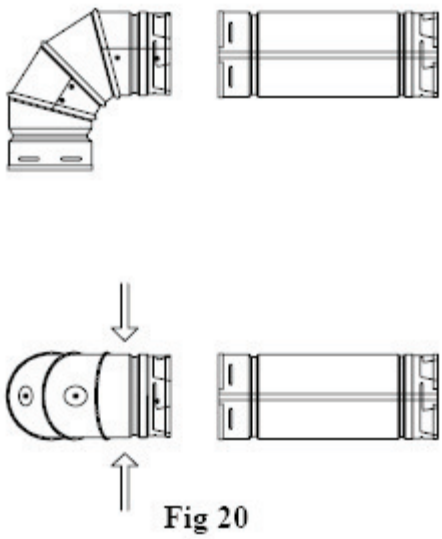
Fig 20

3. **90° Elbows**. Figure 20. The installer should apply pressure to the section at the points indicated by the arrows. This will prevent the adjacent sections of the elbow from turning, as the next pipe or fitting is twist-locked on. This is important, because once these sections start rotating, the elbow

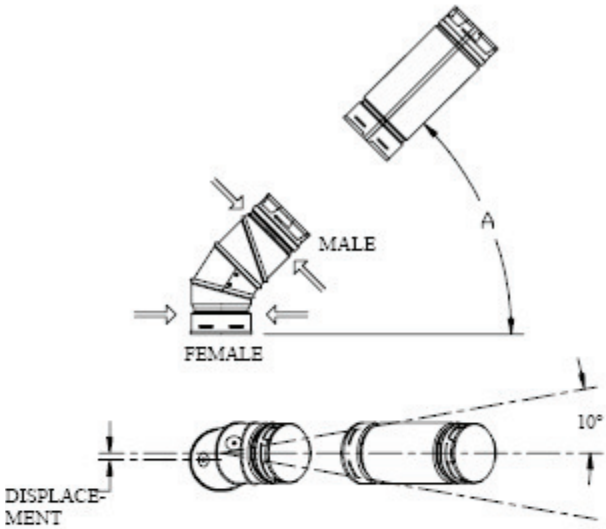

Fig 21

does no longer have a 90° angle.

4. **45° Offsets with 90° Elbows.** Figure 21 shows a **90° Adjustable Elbow** being utilized to accomplish a 45° offset. This **Elbow** is completely adjustable from 0° to 90°. Please note that the centers of the upper sections tend to displace by a slight amount, as they are rotated. Again, screws (not longer than 1/4") may be used to secure the joint. **Wall Straps** should also be utilized to enhance the stability of the vent system.

MALE AND FEMALE ADAPTORS

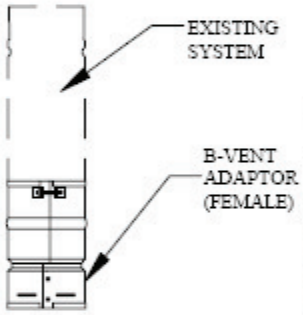

Fig 22

1. **Description**. The male and female adaptors enable an installer to connect Simpson Dura-Vent B-vent components to an existing Type B gas vent system manufactured by the following companies: American Metals Products, Household Mfg, Hart & Cooley Mfg, Metal Fab, Inc, White Metal Products, Air Jet, Mitchell Metal Products.

2. **Connecting into Existing Competitors System**. To connect into an existing competitors gas venting system from below, or from the appliance side, connect a **Female Adaptor** as shown in Figure 22, insuring that the inner liner of the adaptor is outside the inner liner of the existing pipe. Push the adaptor as far up as it will go, and tighten the locking bolt until the connection is snug.

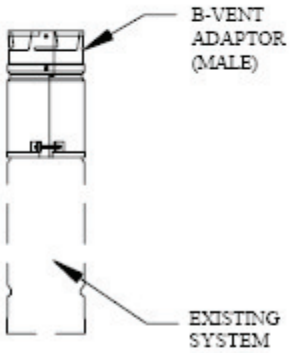

Fig 23

3. **Extending an Existing Competitors System**. To continue an existing competitors system up towards the termination using Dura-Vent Type B Gas Vent, connect a **Male Adaptor** to the last section of the system, as shown in Figure 23, insuring that the inner liner of the **Adaptor** fits smoothly inside the **Pipe** or fitting below it. Push the **Adaptor** down as far as it will go, and tighten the locking bolt until the connection is snug.

RELINING MASONRY CHIMNEYS FOR USE WITH GAS APPLIANCES

1. **Description**. A masonry chimney should be relined with B-Vent when venting a Category I gas appliance, such as a gas fireplace insert or freestanding gas stove, or to improve the venting and reduce condensation of existing gas appliances which are currently venting into the masonry chimney. These instructions encompass two general configurations: (1) A gas fireplace situated inside an existing masonry fireplace (Figure 24) or (2), a free-standing gas appliance venting into an existing masonry chimney. (Figure 30)

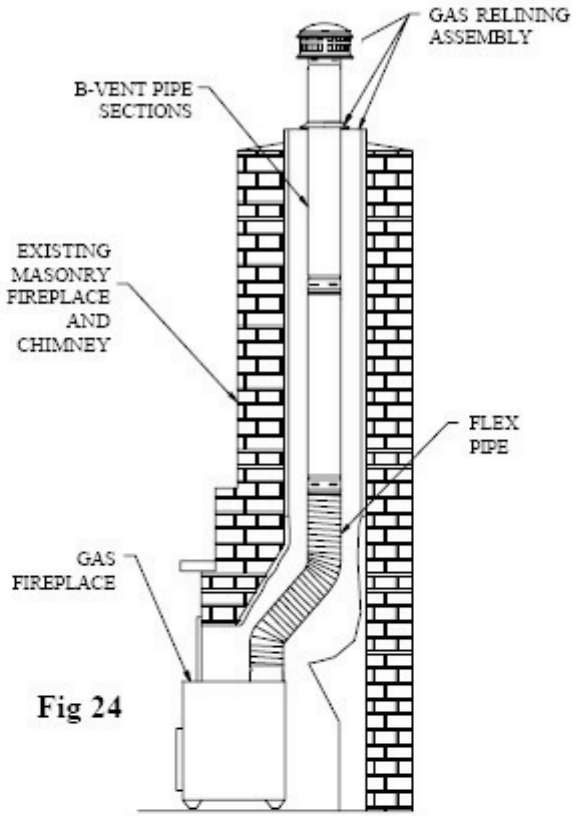

Fig 24

2. **Masonry Inspection**. Have the masonry chimney inspected by a qualified chimney sweep or installer to determine it's structural condition. Clean and repair as necessary.

3. **Gas Fireplace**. Carefully read the appliance manufacturer's installation instructions. Use the recommended vent size. **Do not** reduce the vent size below that of the flue exit on the appliance. **Do not** common vent gas fireplaces.

(a) **Measurements.** Measure and record the dimension as shown on Figure 25 (Height "A"). You will need an additional 12" of vent above the masonry chimney. It is a good idea to allow for a little extra height

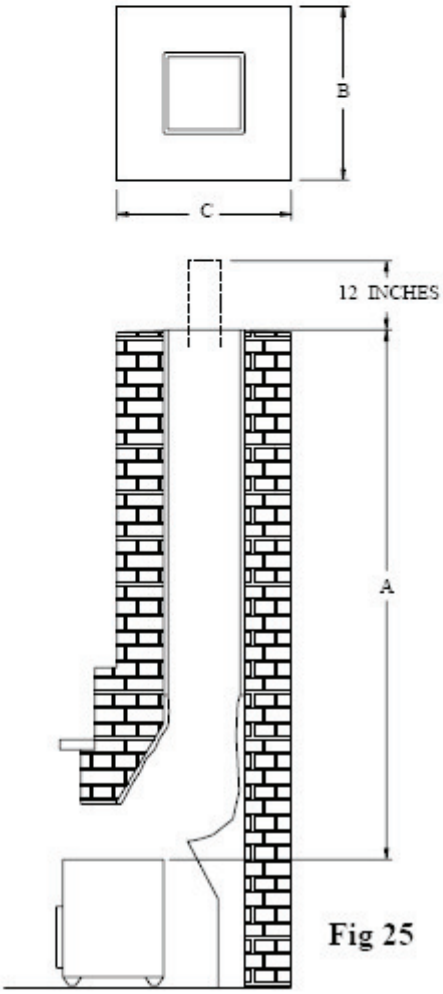

Fig 25

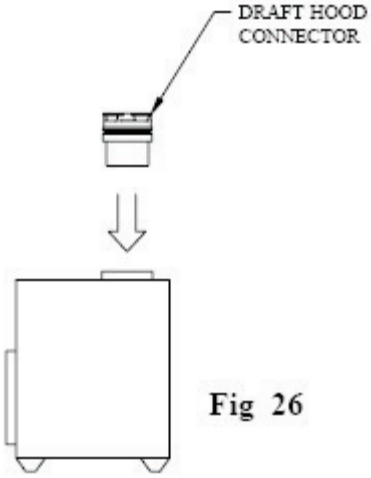

Fig 26

in your measurements.

(b) **Pipe and Fitting Requirements**. The bottom 5 foot section of vent will be **Flex Pipe** (used to get around the smoke shelf, and to connect to the appliance). The remainder will be rigid B-Vent **Pipe Sections**. For each pipe joint, subtract 1-1/2 inches.

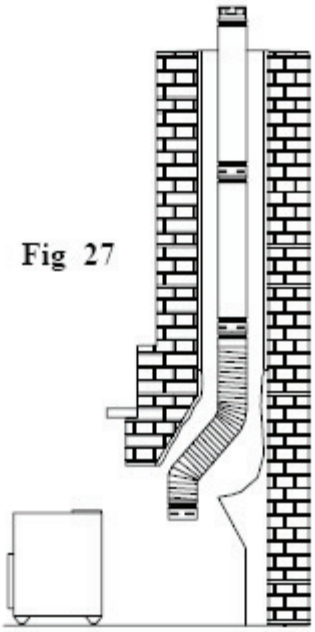

Fig 27

(c). **Connector**. Read the appliance manufacturer's instructions for connecting the **Flex Pipe** to the appliance. In most cases, a **Draft Hood Connector** will be required as shown in Figure 26. If you are not sure, contact the appliance manufacturer for clarification. Place the appliance out in front of the fireplace area, as shown in Figure 27, and install the **Draft Hood Connector**, or other device in accordance with the appliance instructions. The **Flex Pipe Coupling** may be able to attach directly to the appliance.

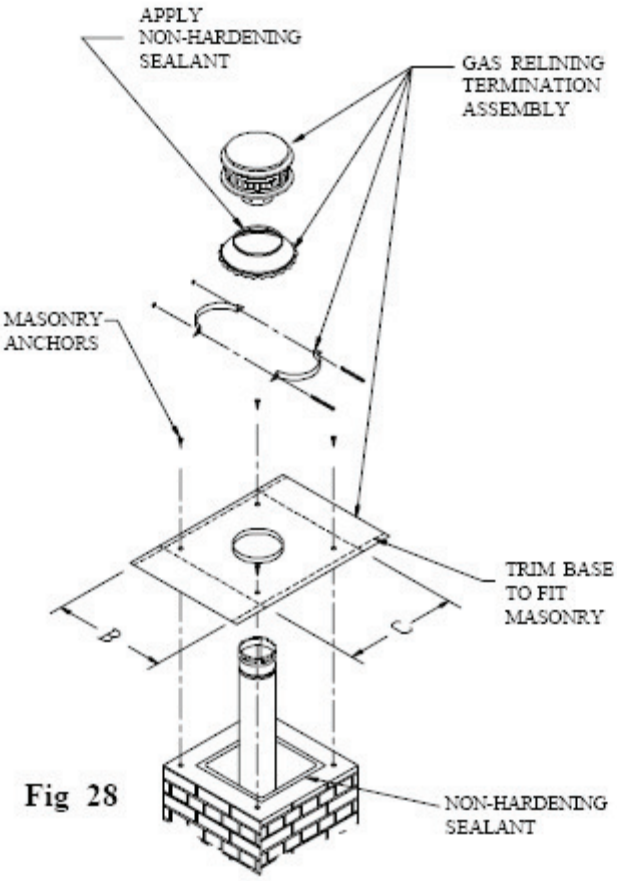

Fig 28

(d). **Flex Pipe Assembly**. Assemble first **Rigid Pipe Section** to the **Flex Pipe**, insuring that the "UP" arrows are in fact, pointing up. Push the sections together and twist to lock. Screws are not required, however if you desire to use them, use #8 sheet metal screws 1/4-inch long, being careful not to penetrate the inner liner. Repeat this process for the remainder of the **Pipe Sections**, and lower the assembly down the chimney. Lower it below it's normal position as shown in Figure 28.

(e). **Position and Connect**

Fireplace. Push the gas fireplace towards the firebox, and connect the **Flex Pipe** female coupling to the appliance, or to the appropriate connector as specified by the appliance manufacturer. If insufficient space is available between the top of the appliance, and the fireplace opening, an access opening in the opposite side of the masonry chimney may be necessary. Position the gas appliance on it's final location, again complying with the manufacturer's instructions in regards to location. Install any shields or covers at this time.

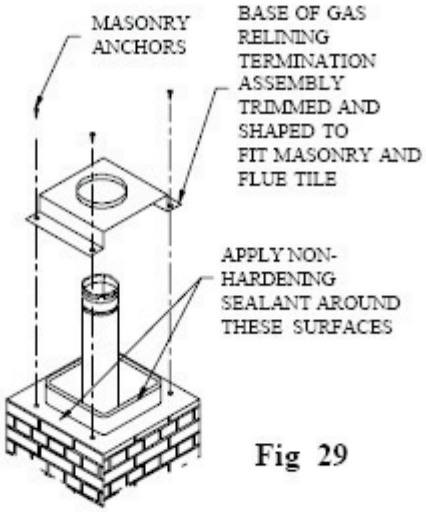

Fig 29

(f). **Adjust Height**. Go to the top of the chimney and pull the vent system up to its desired height. In most cases, this will be 12 inches above the masonry surface. Make a mark on the **Pipe Section** even with the top of the masonry surface. If the **top** of the pipe is near a steep roof (more than 7/12 pitch) ,use the height as stated in Table 2.

(g). **Termination Assembly.** Trim the **Base Plate** of the **Termination Assembly** to cover the masonry opening. Refer to Figures 28 and 29. Slip the **Base** down over the protruding **Pipe Section**. Use masonry anchors and non-hardening sealant to secure the **Base** to the masonry.

(h). **Clamp**. Pull the **Pipe** up through the **Base** to the mark, which you previously made. Slip the **Clamp** down to the mark, and tighten it securely to the **Pipe**. The **Clamp** will then support the entire venting system. Slip the **Storm Collar** down over the **Pipe Section**, and seal the joint with a non-hardening sealant.

(i). **Top**. Install the **Top**, as shown in Figure 28. This concludes the procedures for installing a gas fireplace in an existing masonry fireplace. Conduct a final inspection of the system, and verify that the manufacturer's installation instructions have been totally complied with.

2. **Gas Appliance Venting Into the Side Wall of a Masonry Chimney.**

(a). **Locate Appliance**. Set the appliance in it's desired position, and mark the center of the hole where the lateral **Pipe Section** is to pierce the masonry chimney. Insure the manufacturer's requirements are complied with, particularly in regards to distances from combustible surfaces. Refer to Figure 30.

(b). **Hole in Masonry**. Move the appliance aside, and break out the masonry, forming a hole large enough for the **Pipe Section** to get through, and also

large enough to reach through and hold the **Tee**, while connecting the horizontal **Pipe Section**. An alternate procedure is to make the hole only large enough for the **Pipe Section** to pass through, and construct an access gate on the other side of the masonry chimney. **Do not mortar to the pipe.**

(c). **Tee**. A **Tee** is installed at the bottom end of the assembled vertical **Pipe Sections**, as shown in Figure 30. The **Tee** has a removable **Tee Cap** at the bottom, for cleaning and condensate removal. If the configuration of the building permits it, a clean-out access gate is recommended.

(d). **Vertical Pipe Sections**. Run the assembled vertical **Pipe Sections** (with the **Tee** attached to the bottom), down the chimney, until the horizontal branch of the **Tee** is opposite the hole in the masonry.

(e). **Adjust Height**. Hold the assembled **Pipe Sections** in this position, and make a mark even with the top surface of the masonry chimney. The vertical **Pipe Sections** should protrude 12 inches (in most cases) above this mark. If the top of the pipe will be near a steep roof (more than 7/12 pitch), use the height as stated in Table 2.

(f). **Termination Assembly**. Trim the **Base Plate** of the **Termination Assembly** to cover the masonry opening. Refer to Figures 28 and 29. Slip the **Base** down over the protruding **Pipe Section**. If necessary, use masonry anchors and non-hardening sealant to secure the **Base** to the masonry or bend base to secure.

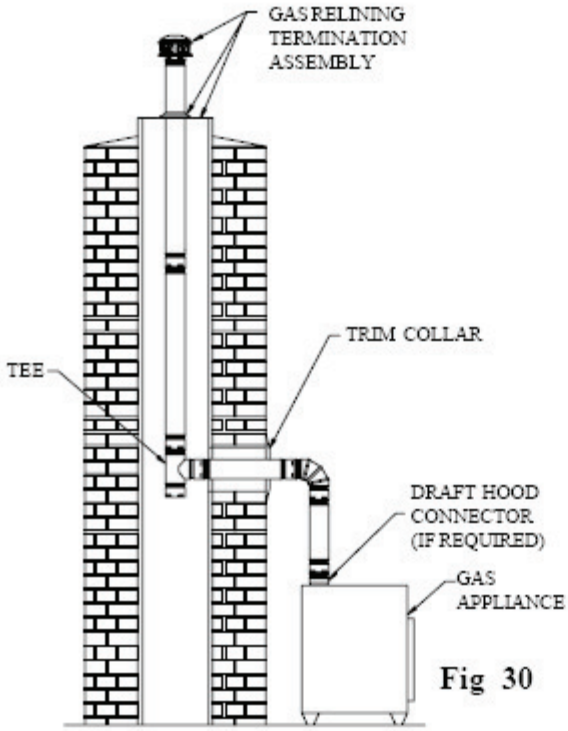

Fig 30

(g). **Clamp**. Pull the **Pipe** up through the **Base** to the mark, which you made previously. Slip the **Clamp** down to the mark, and tighten it securely to the **Pipe**. The **Clamp** will then support the entire venting system. Slip the **Storm Collar** down over the **Pipe Section**, and seal the joint with a non-hardening high temperature RTV.

(h). **Horizontal Pipe Section(s)**. Run the horizontal **Pipe Section(s)** through the hole in the masonry, and connect it firmly to the **Tee**, either by reaching through the hole, and holding the **Tee** while twisting the **Pipe Section**, or by holding the **Tee**

through the access door while someone twist-locks the **Pipe Section** to it. Use an **Adjustable Pipe Length** as needed to obtain a specific location for the appliance. Make a mark on the horizontal **Pipe Section** flush with the vertical face of the masonry, for referencing the vertical position. Slip a **Pipe Collar** over the horizontal **Pipe Section** and install the remaining fittings as shown in Figure 30. A minimum of 12 inches of connector rise is required.

(i). **Insulation**. Pull the **Pipe Collar** towards the **90° Elbow**. Fill in the gap between the masonry and the horizontal **Pipe Section** with ceramic fiber insulation or fiberglass, as shown in Figure 31. If fiberglass is used, remove any paper backing. The filling may be faced off with grout, if desired. Push the **Pipe Collar** back flush with the masonry. Make any final adjustments on the **Adjustable Length Pipe** (if used), and tighten the clamping bolts.

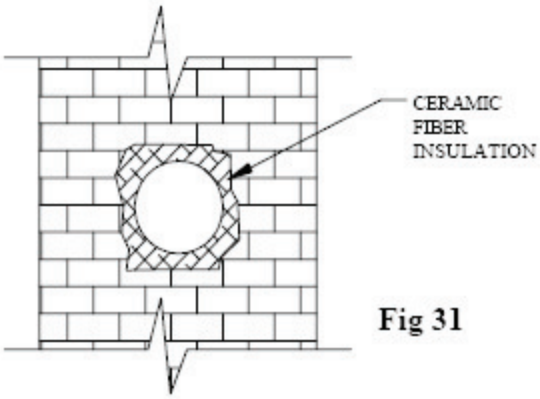

Fig 31

TROUBLESHOOTING

1. **Purpose**. This section is intended as a general maintenance and troubleshooting guide, and as such, cannot encompass all configurations or vent designs. For problems encountered which are beyond the scope of this sheet, contact your Dura-Vent Dealer, Distributor, or Simpson Dura-Vent's Engineering Department. **It is imperative that the one-inch clearance (air space) defined in these instructions be maintained**. In most cases, a one-inch minimum clearance must be maintained to combustibles. The only exceptions are 4-inch, 5-inch and 6-inch **Oval B-vent** which are installed within stud walls. **Oval B-vent** and **BW Vent** are the subject of a separate installation instruction, and are not discussed here. In these cases, the clearances are established by the listed **Firestop Spacers** described in the instructions for **Oval B-Vent**.

2. **Appliance**. Read the appliance installation instructions carefully, insuring that the prescribed clearances are met, and that it is a Category I appliance.

3. **Spillage**. Spillage from an appliance draft hood may cause condensation on windows, or odors that the occupant may notice. Spillage may be caused by an incorrectly sized vent system, blockage of the vent system, or a downdraft in the vent. Other causes are: excessive lateral runs, too many elbows, improper pitch to lateral runs (1/4 inch per foot of run is correct), fans or ventilation systems in the same general area as the gas appliance, or wind conditions at the

vent cap.

4. **Blockage**. Check the system for blockage by removing the cap, and looking down into the vent with a flashlight. Check for bird nests, debris, rodents, insects, or other obstructions. If nothing is found, inspect the entire system for physical damage.

5. **Downdraft**. Downdrafts are generally caused by the system's termination being too close to an adjacent wall, parapet, or other structure. If the cap is within eight feet of such an obstruction, it must also be at least two feet above it. Also insure that the top is at the height prescribed for your roof pitch in Table 2. Inadequate combustion air is also a major cause of downdraft problems. Appliances like clothes dryers or other exhausting appliances in the same utility room can cause downdraft problems.

6. **Condensate/Corrosion**. Continuous condensate can cause corrosion (rusting) of vents, tops, appliance draft hoods, and other components of the system, as well as the inside of the appliance. **This situation can be extremely dangerous, and corrective action must be taken immediately.** Common causes of corrosion are listed below: If in doubt call a professional to inspect the vent.

(a) If the vent system is located in an area where spray cans or solvents are used extensively, (laundry areas, or paint shops, for example), the halogenated compounds get into the combustion air. When they are burned, they form compounds that cause corrosion. The corrective action in this case, is to isolate the appliance, and get the air supply from outside, or an uncontaminated area.

(b) Condensate may be caused by incorrect sizing of the vent system. Follow the procedures in the various sizing publications to obtain the correct sizes for connectors and vents. Other causes are: excessive lateral runs, too many elbows, cold attics and crawl spaces, and large areas of the exterior portions of the venting system exposed to cold weather. As a general rule, laterals should be held to a minimum, and be no longer than 75% of the vertical height of the system. Condensate may initially appear as beads on the outside of the connector or vent.

7. **Construction**. Laterals, offsets, and vertical components should be securely supported with wall straps, as previously described. Components of the vent which are in occupied areas should be enclosed to prevent accidental contact and damage to the vent system. Insure that insulation, building materials, or debris do not extend into the required clearance spaces. In cold climates, the exterior portions of the vent should be enclosed in a chase. Outside portions of the vent system with may be painted with high temperature paint to help

prevent rusting and corrosion on the exterior surfaces.

MAINTENANCE

1. An annual inspection is required to maintain warranty of your Simpson Dura-Vent B-Vent system. You will need to inspect the **Cap, Vent Pipe, Connector Pipe**, and the connection to the appliance.

2. Verify that the sealant around the Flashing and Storm Collar is intact. Reseal as needed. Remove Cap. Hold Cap by the collar only, and unlock by twisting counterclockwise, and then pull up. Grabbing the Cap by the outer edge or top can cause damage to the Cap.

3. Inspect Cap for any physical damage or damage from corrosion. Look for any foreign material inside the cap or vent. (Example: bird's nest, leaves, etc.)

4. Shine a light down inside of the vent pipe. Look for any evidence of damage, corrosion or excessive condensation. Also, look for any disconnected sections of the vent pipe or connector pipe. Refer to the installation instructions to reconnect pipe sections. If pipe sections are damaged or corroded, **replace immediately!**

5. Replace Cap by grabbing cap (by collar only), and slide onto pipe section and twist-locking (clockwise).

6. Inspect appliance connector and make sure that the vent is securely connected to the appliance.

7. Damaged or corroded parts should be replaced immediately! Failure to do so can lead to an extremely hazardous situation!

8. Follow your appliance manufacturer's recommended instructions for inspection your appliance.

Simpson Dura-Vent offers the industry's only twenty-five year warranty on Type B gas vent system and is UL listed. This warranty is in effect from the date of installation and includes all components and fittings. Simpson Dura-Vent warrants the following products: All Fuel Class A Chimney - Dura/Plus® and Dura-Chimney®; Close Clearance Connector Pipe - DVL®; Type B Gas Vent and Pellet Vent® Chimney for a period of twenty-five years from date of installation. Warranty includes all component fittings, except rain caps, which is covered for five years from date of installation. Direct Vent GS® is warranted for ten years from the date of installation. Dura/Connect® is UL listed, approved by ICBO, BOCA and SBCCI and is warranted for ten years from the date of installation. DuraFlex® pipe and fittings is UL and ULC listed and is warranted for ten years from the date of installation. Warranty includes component fittings, except cap assembly which is covered for five years from date of installation. Dura-Black® drip free stovepipe is warranted for five years from the date of installation. Dura/Liner® is UL and ULC listed and is warranted for twenty-five years from the date of installation. All warranties, whether expressed or implied, shall be limited to replacement (exclusive of installation costs) of our product found to be defective under its warranty and shall be conditional upon compliance with the manufacturer's recommended installation and maintenance procedures and intended use of the product, and providing all recommended installation and maintenance instructions are followed. All products must be maintained by periodic inspection and cleaning as needed, including chimney exposed to weather containing corrosive elements or contaminated intake air, due to storage of corrosive agents near the appliance. Always refer to warranty specifics for each product line.

SIMPSON
DURA-VENT, INC
PO Box 1510
Vacaville, CA
95688-1510

(800)-835-4429
(707)-446-4740 (FAX)

Vicksburg, MS

April 2000
L204A

Decorative Gas Log Appliance Installation

Installation and service of the decorative gas log appliance must be performed by a locally certified gas service agent, licensed plumber, or the gas supplier.

Fire Rock Products, LLC includes a decorative Gas Log Appliance from Heatmaster with your 14000 Series fireplace. Please be sure to install the proper size log and burner set with each firebox. Use the following chart for determination:

	14030	14036	14042	14048
Burner No.	SBS-IPI-18NG/LP	SBS-IPI-24NG/LP	SBS-IPI-24NG/LP	SBS-IPI-30NG/LP
Burner Size	18”	24”	24”	30”
Log No.	WB-18	WB-24	WB-24	WB-30
Log Size	18”	24”	24”	30”

Included on the next pages is the Installation Manual for the Heatmaster Western Blaze Decorative Gas Log Appliance. While there may be references that do not apply to this installation, based on the chart above, the installation instructions must be followed exactly.

Installation Instructions

HEATMASTER

AMERICAN GAS LOG

Models:

SBS-MAN-18,24,30 LP or NG
SBS-REM-18,24,30 LP or NG
SBS-IPI-18,24,30 LP or NG
SBSIII-MAN-18,24,30 LP or NG
SBSIII-REM-18,24,30,LP or NG
SBSIII-IPI-18,24,30 LP or NG

Tested & Listed By O-T-L Beaverton Oregon USA c US ©MH Test Laboratories, Inc.

Installation and service of this appliance should be performed by qualified personnel. Heatmaster/ American Gas Log, LLC suggests NFI certified or factory-trained professionals, or technicians supervised by an NFI certified

Check with your local building code agency before you begin installation to ensure compliance with local codes, including the need for permits and follow-up inspections. If you encounter any problems regarding code approvals, or if you need clarification of any of the instructions contained here, contact the Technical Services Dept., Heatmaster/American Gas Log, LLC. 919-330-0078 or 919-330-0079.

CAUTION

DO NOT DISCARD THIS MANUAL

- Important operating and maintenance instructions included.
- Read, understand and follow these instructions for safe installation and operation.
- Leave this manual with party responsible for use and operation.

DO NOT DISCARD

⚠ WARNING

If the information in these instructions is not followed exactly, a fire may result causing property damage, personal injury, or death.

- Do not store or use gasoline or other flammable vapors and liquids in the vicinity of this or any other appliance.
- **What to do if you smell gas:**
  - Do not try to light any appliance.
  - Do not touch any electrical switch. Do not use any phone in your building.
  - Immediately call your gas supplier from a neighbor's phone. Follow the gas supplier's instructions.
  - If you cannot reach your gas supplier, call the fire department.
- Installation and service must be performed by a qualified installer, service agency, or the gas supplier.

⚠ WARNING

HOT! DO NOT TOUCH.
SEVERE BURNS MAY RESULT.
CLOTHING IGNITION MAY RESULT.

Glass and other surfaces are hot during operation and cool down.

- Keep children away.
- CAREFULLY SUPERVISE children in same room as appliance.
- Alert children and adults to hazards of high temperatures.
- Keep clothing, furniture, draperies and other combustibles away.

In the Commonwealth of Massachusetts:

- This appliance must be installed by a licensed plumber or gas fitter.
- The chimney flue damper, when used with gas logs, will be welded open or completely removed.
- A CO detector shall be installed in the room where the appliance is installed.

Read this manual before installing or operating this appliance.
Please retain this owner's manual for future reference.

Congratulations

Congratulations on selecting a Heatmaster/American Gas Log, LLC gas log set—an elegant and clean alternative to burning wood. The Heatmaster/American Gas Log, LLC gas log set you have selected is designed to provide the utmost in safety, reliability, and efficiency.

As the owner of this new gas log set, you'll want to read and carefully follow all of the instructions contained in this owner's manual. Pay special attention to all cautions and warnings.

This owner's manual should be retained for future reference. We suggest you keep it with your other important documents and product manuals.

The information contained in this owner's manual, unless noted otherwise, applies to all models and gas control systems.

Your new gas log set will give you years of durable use and trouble-free enjoyment. Welcome to the Heatmaster/American Gas Log, LLC family of appliance products!

Homeowner Reference Information

We recommend that you record the following pertinent information about your gas log set:

Model Name: _____ Date purchased/installed: _____

Serial Number: _____ Location on appliance: _____

Dealership purchased from: _____ Dealer phone: _____

Notes: _____

_____

_____

Listing Label Information/Location

The model information regarding your specific gas log set can be found on the rating plate.

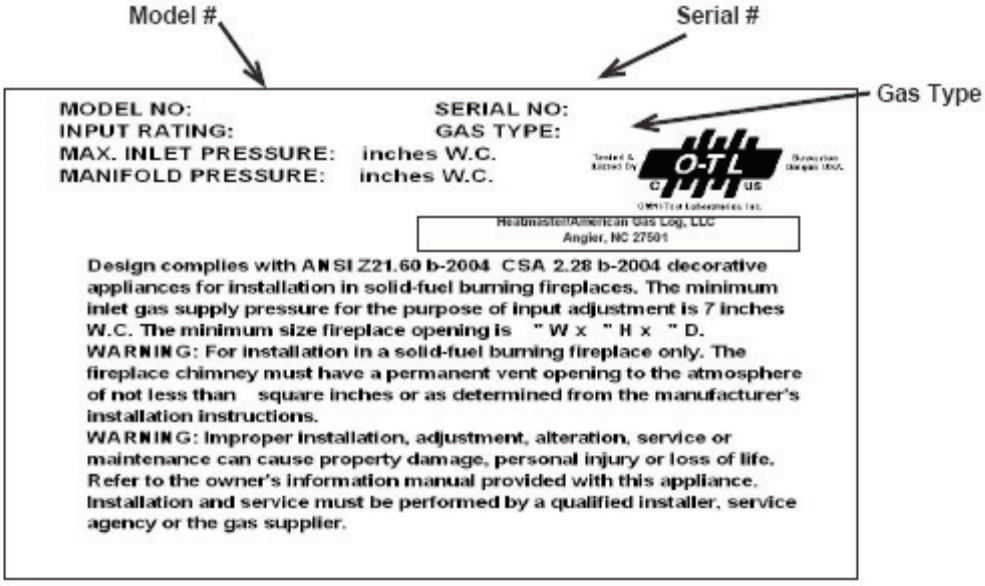

⚠ WARNING

Improper installation, adjustment, alteration, service or maintenance can cause injury or property damage. Refer to the owner's information manual provided with this appliance. For assistance or additional information consult a qualified installer, service agency or the gas supplier.

CAUTION

Sharp Edges
- Wear protective gloves and safety glasses during installation.

⚠ WARNING

HOT! DO NOT TOUCH.
SEVERE BURNS MAY RESULT.
CLOTHING IGNITION MAY RESULT.

Glass and other surfaces are hot during operation and cool down.

- Keep children away.
- CAREFULLY SUPERVISE children in same room as appliance.
- Alert children and adults to hazards of high temperatures.
- Keep clothing, furniture, draperies and other combustibles away.

A. Design and Installation Considerations

The Gas Log Hearth Kit consists of the following:

- Log Set
- Burner/Pan Assembly
- Grate Assembly
- Rock Wool
- Sand (NG only)
- Lava Rock
- Damper Stop
- Vermiculite
- Platinum Embers

B. Tools and Supplies Needed

Tools and supplies normally required for installation:

Pliers
Phillips screwdriver
Tape measure
Crescent wrenches
Gas shutoff valve
Non-corrosive leak check solution
3/4 in. wrench, 7/16 in. wrench

C. Important!

- Do not remove any of the attached metal plates, which contain important safety and operating information.
- Keep the appliance area clear and free of all combustible materials, gasoline and other flammable vapors and liquids.
- Any safety screen or guard removed during servicing must be replaced before operation.
- **A qualified service technician must perform installation and repair.** The appliance should be inspected and cleaned annually by a qualified service technician. More frequent cleaning may be required due to excessive lint, dust, pet hair, etc. It is imperative that the control compartments, burners and air passageways are unobstructed during operation.
  - Review proper placement of logs, rockwool, lava rock and vermiculite.
  - Check the wiring.
  - Ensure there are no gas leaks.
  - Ensure the flow of combustion and ventilation air is not obstructed (front grilles and vent caps).
- Before installing into a solid fuel burning fireplace, the chimney and firebox should be inspected and cleaned to remove soot, creosote, ashes, paint, bird nests etc.
- Annual examination of the chimney must be performed by a qualified agency to ensure proper ventilation of flue gases created by this appliance.

⚠ WARNING

Fire Risk
Exhaust Fumes Risk
- Do NOT use this appliance as a "vent-free" heater.

The flue must be permanently open according to Tables 1 and 2.

- Have the chimney and adjacent structure inspected and cleaned by qualified professionals. Heatmaster/American Gas Log, LLC recommends that NFI or CSIA certified professionals, or technicians under the direction of certified professionals, conduct a minimum of an **NFPA 211 Level 2** inspection of the chimney.
- Replace component parts of the chimney and fireplace as specified by the professionals.
- Ensure all joints are properly engaged and the chimney is properly secured.
- Do not allow fans to blow directly into the fireplace. Avoid any drafts that alter burner flame pattern.
- Do not use a blower insert, heat exchanger insert or other accessories not approved for use with this appliance.

- This appliance must have a screen in place while the appliance is in operation and, unless other provisions for combustion air are provided, the screen shall have an opening for introduction of combustion air.
- Solid fuels shall not be burned in a fireplace where a decorative appliance is installed.
- If glass doors are present, the glass doors must be fully opened while appliance is in operation.

⚠ WARNING

Do NOT use this appliance if any part has been under water. Immediately call a qualified service technician to inspect the appliance and to replace any part of the control system and any gas control which has been under water.

D. Appliance Certification

This appliance is design certified by Omni International under the **ANSI Z21.60b-2004 or CSA 2.26b-2004, Decorative Appliances for Installation in Solid-fuel Burning Fireplaces.** Installation and the provisions for combustion and ventilation air must conform to the **National Fuel Gas Code, ANSI Z223.1/NFPA 54**, or the **CSA B149.1, Natural Gas and Propane Installation Code.**

E. Gas Supply Connection

A 3/8 in. flared fitting has been installed on the gas valve inlet at the factory. Ensure fittings are of the appropriate size and type on the gas line connection. If the tubing has to be cut to length be sure to use the proper cutting and flaring tool. Also, be careful not to crimp the tubing while bending. If the tubing becomes crimped, do not use for installation.

Gas resistant pipe compound must be used on all threaded male connections to ensure a tight seal.

F. Gas Pressure

Proper input pressures are required for optimum appliance performance. Gas line sizing requirements need to be made following **NFPA51**.

⚠ WARNING

Fire Risk
Explosion Risk

High pressure will damage valve.

- Disconnect gas supply piping BEFORE pressure testing gas line at test pressures above 1/2 psig.
- Close the manual shutoff valve BEFORE pressure testing gas line at test pressures equal to or less than 1/2 psig.

⚠ WARNING

Fire Risk
Explosion Risk

Verify inlet pressures.

- High pressure may cause over fire condition.
- Low pressure may cause explosion.

Install regulator upstream of valve if line pressure is greater than 1/2 psig.

- Gas Supply Pressure: Minimum inlet gas supply pressure must be 7.0 in. W.C. for natural gas or 11 in. W.C. for LP gas for the purpose of input adjustment. Maximum inlet gas pressure must not exceed 10.5 in. W.C. for natural gas or 13 in. W.C. for LP gas. The gas line supplying the appliance must be sufficient size to furnish the appropriate supply pressure to the appliance while operating in the "High" setting.
- Pressure tap screws must be closed before turning gas on to the appliance.
- Gas Line Pressure Test: Perform pressure test according to state and local code (if pressure exceeds 1/2 in. psi (3.5 kPa)) before appliance is connected. Be sure to release air pressure from the gas line before connection is made to the appliance. Excessive pressure will damage the gas control and may cause a gas leak.
- Gas Leak Test: Make sure the gas connections are tight. Turn on the gas and coat each joint with a non-corrosive gas leak check solution. Air bubbles will form indicating any leaks. DO NOT USE A FLAME OR ANY TYPE OF IGNITION SOURCE TO CHECK FOR LEAKS. All leaks must be corrected before proceeding with installation.
- The appliance must only be installed in a solid-fuel burning fireplace with the flue damper clamped open according to Tables 1 and 2. The fireplace must be constructed of non-combustible material.
- The minimum permanent free opening (in square inches) that must be provided by the fireplace chimney or damper to vent the flue gases is provided in Tables 1 and 2. If the free opening is smaller than the specified area, do not use this appliance.
- The damper must be removed or fixed in a manner in which will secure it open. Some jurisdictions require the damper to be removed or permanently welded fully open. Check with state and local codes.
- Be sure that the chimney is completely unobstructed to ensure proper ventilation of flue gases including carbon monoxide (CO). CO (a poisonous gas) is tasteless, odorless, colorless and undetectable without proper equipment.
- Refer to Table 3 to determine minimum fireplace opening requirements before proceeding.

G. Negative Pressure

Negative pressure results from the imbalance of air available for the fireplace to operate properly. Causes for this imbalance include:

- Exhaust fans (kitchen, bath, etc.).
- Range hoods.
- Combustion air requirements for furnaces, water heaters and other combustion appliances.
- Clothes dryers.
- Location of return-air vents to furnace or air conditioning.
- Imbalances of the HVAC air handling system.
- Upper level air leaks: recessed lighting, attic hatch opening, duct leaks.

⚠ WARNING

Asphyxiation Risk

This appliance produces carbon monoxide (CO).

- The free opening areas (in square inches) of the chimney damper as shown in the following tables must be met.
- User must make sure damper is locked open.
- The installer is responsible to ensure proper ventilation of flue gases before appliance is used.

Fire needs to draft properly for safe operation.

Table 1 for Factory Built Fireplaces

Free Opening Area (in square inches) of Chimney Damper for Venting combustion Products from Decorative Appliances for Installation in Solid Fuel Burning Fireplaces.

Chimney Ht. (Feet)*	18 in. Log Set LP Gas	18 in. Log Set Natural Gas	24 in. Log Set LP Gas	24 in. Log Set Natural Gas	30 in. Log Set LP Gas	30 in. Log Set Natural Gas
10	28.3	28.3	35.3	not approved	44.2	not approved
15	21.2	21.2	26.4	38.5	32.2	45.4
20	18.1	18.1	22.1	31.2	26.4	37.4
25	15.9	15.9	18.1	27.3	22.9	31.2
30	14.5	14.5	17.3	24.6	20.4	28.3
35	13.2	13.2	15.9	22.1	18.9	25.5
40	12.6	12.6	15.2	20.4	18.1	23.8

Table 2 for Masonry Built Fireplaces

Free Opening Area (in square inches) of Chimney Damper for Venting combustion Products from Decorative Appliances for Installation in Solid Fuel Burning Fireplaces.

Chimney Ht. (Feet)*	18 in. Log Set LP Gas	18 in. Log Set Natural Gas	24 in. Log Set LP Gas	24 in. Log Set Natural Gas	30 in. Log Set LP Gas	30 in. Log Set Natural Gas
6	41.7	41.7	49.2	64	56.6	71.4
8	38.7	38.7	45.5	59.7	52.4	66.9
10	35.2	35.2	41.7	54.3	48.2	60.2
15	32.0	32.0	37.7	48.8	43.2	54.1
20	28.8	28.8	34.3	44.4	39.8	49.1
30	26.5	26.5	31.2	40.3	35.9	44.5

* Height is measured from the hearth to the top of the chimney.
Minimum height is 6 ft.

Table 3 for Minimum Fireplace Dimensions

Burner Style	Front Opening	Depth	Height	Rear Width	Natural BTU	Propane BTU
SBS18	27 in.	16 in.	18 in.	19 in.	44,000	40,000
SBS24	34 in.	20 in.	18 in.	22 in.	73,000	61,000
SBS30	40 in.	20 in.	18 in.	29 in.	80,000	70,000
SBSIII18	32 in.	23 in.	22 in.	21 in.	76,000	74,000
SBSIII24	34 in.	23 in.	22 in.	22 in.	88,000	80,000
SBSIII30	40 in.	23 in.	22 in.	29 in.	92,000	82,000

H. Inspect the Appliance and Components

- Remove the contents from the burner box. Attached to the burner are tags identifying the manufacturer name, serial number, model number (including gas log size), BTU ratings, gas type, etc.
- Review the attached tags before proceeding. Ensure that all minimum fireplace dimension requirements are achieved using Table 3 . See Figure 1. Ensure the gas type provided in the fireplace coincide with the gas type marked on the tag.

Figure 1 Measure Firebox

- The burner is assembled with the controls installed at the factory and is designed to connect one end of the 3/8 in. supply line before placing inside the fireplace. Ensure the connection is tightened using a 3/4 in. wrench.
- Place the burner towards the rear and center of the fireplace and connect to the gas line. Follow instructions in "F. Gas Pressure" to check for gas leaks.
- During shipping and handling of this appliance the safety pilot control valve cover may not be in place. Once the burner is installed in the fireplace, be sure to place the cover over the valve to prevent overheating. See Figure 2.

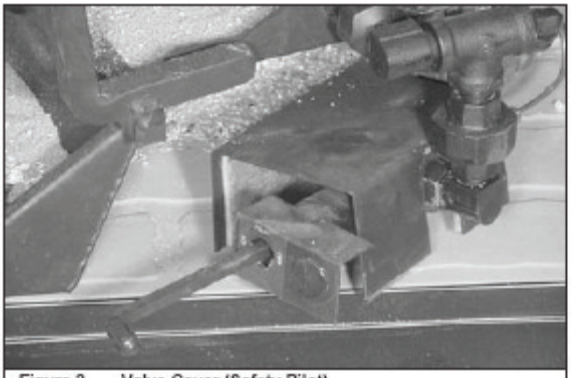

Figure 2 Valve Cover (Safety Pilot)

- IPI models include a battery box which holds 2 "D" size batteries. The battery box should be placed in the right front corner of your fireplace and covered with the log cover as shown in Figure 3.
- An On/Off switch is provided as part of the assembly. It is located on the front right side of the burner assembly as shown in Figure 3A.
- Optional remote control system can be incorporated with this system by connecting the remote system to the connection wires shown in Figure 3A.

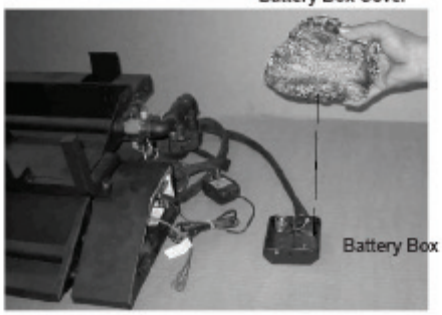

Figure 3 Battery Box and Cover (for IPI units only)

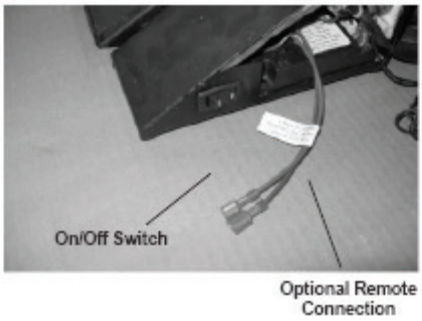

Figure 3A Control Box for IPI

- Install the grate by placing the inserts (attached to the grate) into the slots provided in the burner pan. Slide the inserts into the slots (Figure 4) and push the grate as far as possible to the locked position.
- For propane (LP) installations skip to "J for Propane Gas Installation".

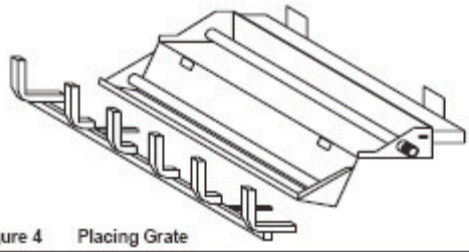

Figure 4 Placing Grate

I. For Natural Gas Installation

- Pour sand into the burner pans to the point where the burner pipe is covered. See Figure 5. Level the sand from right to left to ensure an even flame pattern. At this point the pan should be half full. Be sure not to cover pilot assembly.

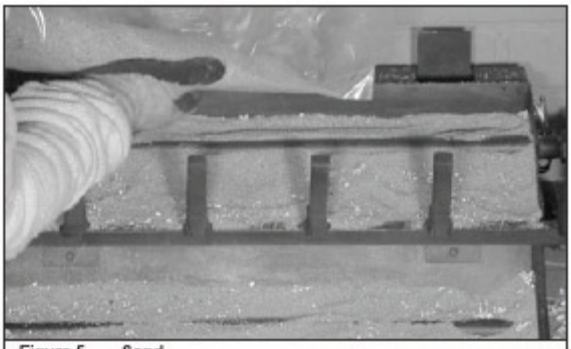

Figure 5 Sand

- Pour vermiculite over the sand in the pans until they are full. See Figure 6.

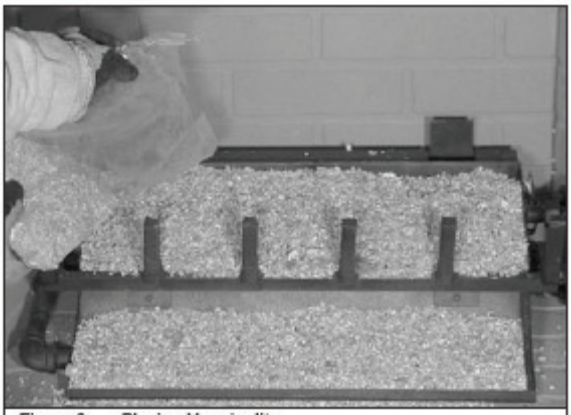

Figure 6 Placing Vermiculite

- Lightly place dime-size pieces of rock wool evenly on top of the sand and vermiculite to achieve a glowing ember effect. See Figure 7.

Note: For best results, do not pack down the rock wool. The placement of rock wool can have an effect on flame pattern and may need to be adjusted to achieve a desired appearance.

Figure 7 Placing Rock Wool

- <u>Inspect the pilot burner to ensure it is clear of any rock wool</u>.
- Remove the Platinum Bright Embers™ from the package. For optimum performance peel each piece apart in layers and lightly place on top of the vermiculite and rock wool where the flame is blue. This will achieve the desired realism.
- The gas burns at the point of the least resistance. In case of an uneven flame pattern it may be necessary to adjust the materials in the pans (using an object such as a screwdriver) to achieve the desired effect.
- Place desired amount of lava granules on the floor of the fireplace. <u>DO NOT ALLOW THE GRANULES TO COME IN CONTACT WITH THE FLAMES</u>. (Lava granules may contain moisture which, when heating, may cause it to pop out during installation and set-up.) Ensure the controls and switches are unobstructed after the granules are installed.

⚠ WARNING

Fire Risk
Explosion Risk
Personal Injury Risk

Failure to position the parts in accordance with the diagrams provided with the log packages or failure to use only parts approved with this appliance may result in property damage or personal injury.

J. For Propane Gas Installation.

WARNING

Fire Risk
Explosion Risk
Personal Injury Risk

An explosion could occur if a connection is made directly to an unregulated propane (LP) tank.

Pour vermiculite into each burner pan to the point where each pan is completely full. Level the vermiculite from right to left to ensure an even flame pattern. See Figure 6.

Note: Be sure to not cover the pilot assembly (located on the right side of the burner pan, installed in the vertical position) with vermiculite.

WARNING

Fire Risk
Explosion Risk
Personal Injury Risk

Pour vermiculite into each burner pan (LP) to the point where each pan is completely full. Failure to do so may cause the lighting to be delayed and this can be dangerous..

- Lightly place dime size pieces of rock wool evenly on top of the vermiculite to achieve a glowing ember effect. See Figure 7.

Note: For best results, do not pack down the rock wool. The placement of rock wool can have an effect on flame pattern and may need to be adjusted to achieve a desired appearance.

Note: The state of Massachusetts requires that the chimney flue damper, when used with gas logs, be welded open or completely removed. In the Commonwealth of Massachusetts this appliance must be installed by a licensed plumber or gas fitter.

- Inspect the pilot burner to ensure it is clear of any rock wool.
- Remove the Platinum Bright Embers™ from the package. For optimum performance peel each piece apart in layers and lightly place on top of the vermiculite and rock wool where the flame is blue. This will achieve the desired realism.
- The gas burns at the point of the least resistance. In case of an uneven flame pattern it may be necessary to adjust the materials in the pans (using an object such as a screwdriver) to achieve the desired effect.
- Place desired amount of lava granules on the floor of the fireplace. DO NOT ALLOW THE GRANULES TO COME IN CONTACT WITH THE FLAMES. (Lava granules may contain moisture which, when heating, may cause it to pop out during installation and set-up.) Ensure that the controls and switches are unobstructed after the granules are installed. DO NOT COVER THE AIR MIXER LOCATED ON THE LOWER LEFT SIDE OF THE BURNER.

K. Damper Stop Installation Instructions

Included in the burner assembly box is a damper stop clamp which attaches to the damper as shown (Figure 8). Install the clamp to the damper ensuring that the minimum requirements (Tables 1 and 2) are achieved. Use a 7/16 in. wrench to secure the clamp to the damper. If the damper clamp provided does not fit your application, other means of securing the proper opening must be provided by the installer.

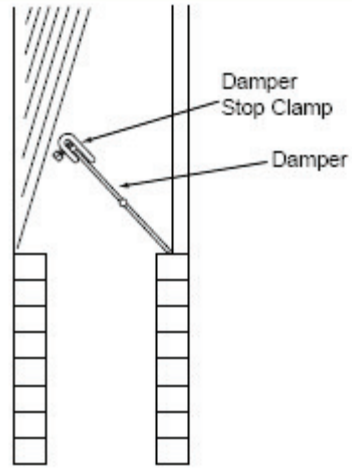

Figure 8 Damper Stop Clamp

L. Inspect the Venting System

The fireplace venting system is designed and constructed to develop a positive flow adequate to remove flue gases to the outside atmosphere. See fireplace installation instructions.

A spillage test must be made before the installed appliance is left with the consumer.

- Close all doors and windows in the home.
- Light the log set (see Lighting Instructions).
- After three minutes, test with a smoke match, smoke candle, stick incense or cigarette 1 in. below the top of the opening (lintel) moving across the full width. If spillage (smoke down into the room) occurs, it will most likely be near the top, outside corners.

Possible cures if spilling occurs:

- The damper needs to be opened further.
- The fireplace opening needs to be reduced by adding a drop panel across the top under the lintel.
- The air supply from outdoors needs to be increased. Open the outside air kit if the appliance is so equipped, or crack open a door or window.
- If necessary, seek expert advice. Do not operate this appliance.

Cleaning

- Periodic examination and cleaning of the venting system of the fireplace should be done before initial use and at least annually by a qualified agency.

M. Cleaning and Maintenance Instructions

Always remember:

- Do not place any combustible material near the appliance.
- Do not place any paper, trash or other material on the log set or in the heater.
- Do not touch any part of the appliance when it is in operation.
- Do not operate this appliance without the fireplace screen closed.

Your appliance is designed to be virtually maintenance free, although periodic visual inspection and cleaning is required. Follow the instructions below for the correct procedures. An annual examination and cleaning the venting system by a qualified person is also recommended.

⚠ CAUTION

- Logs can get very hot. Handle only when they are cool.

CAUTION

After burning, the logs become fragile. Take care in handling.

CAUTION

Before cleaning the appliance, be sure it is turned completely off. The pilot should also be turned off. The unit must be completely cooled.

Do not allow soot to build up on the logs

Your logs require little care. Keep the burner assembly, logs and burner area surrounding the logs clean by brushing with a dry paint brush at least twice a year.

- Always turn off the gas to the pilot before cleaning. For relighting, refer to Section P Thru R. Lighting Instructions.
- Always keep the appliance clean and free from combustible materials, gasoline and other flammable vapors and liquids.
- Never obstruct the flow of combustion and ventilation air. Keep the front of the appliance clear of all obstacles and materials.
- Leave clearance of at least 36 in. from the front of the fireplace.

N. Safety Valve Pilot Flame Adjustment Instructions

The pilot flame adjustment screw is located on the front side of the pilot gas tubing port. Using a small straight blade screwdriver, turn the screw clockwise ↻ to adjust the pilot flame down and counterclockwise ↺ to adjust the flame up. This screw is sensitive; therefore it will not take much adjustment to accomplish this flame adjustment.

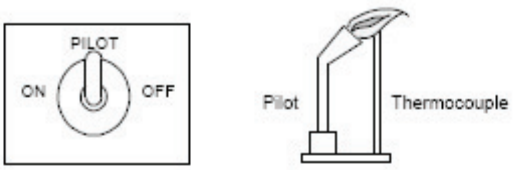

O. Frequently Asked Questions

Can I close the glass doors on my fireplace when using my gas logs?

No. The gas log sets are designed for use in fireplaces with all fireplace doors fully opened. Operating your log set with the doors closed will cause overheating, premature failure of valve systems, and will void the warranty of your log set.

What sort of maintenance do gas logs require?

Vented gas logs do not require regular maintenance. However, it is a good idea to have valves, pilots and gas connections on your set periodically inspected by a hearth professional. Although it is not required maintenance, annually refurbishing the ember material and periodic cleaning of the logs will help maintain your set's beauty and realism.

Why do I need a safety pilot control for my LP gas log set?

Since LP gas is heavier than air, it tends to gather or pool in low spots, rather than dissipating through the chimney flue. Furthermore, escaping LP gas can go unnoticed until a significant quantity has gathered, creating a potential hazard. Installation of a safety pilot control ensures that gas cannot accidentally pass through the burner when not operating, eliminating the risk of such an occurrence.

Does the ember material burn-up, and do I need to replace it periodically?

The ember material is a fireproof, organic mineral material called rock wool, and does not burn or require periodic replacement; however, annual refurbishment of the embers will help maintain the beauty and realism of your log set.

Can I burn real wood along with my gas logs?

No. The intense heat of a wood fire will damage your logs, burners, grates and valves, and will void your warranty.

Will gas logs help my chimney that drafts poorly?

No. Improper or poor draft will not be helped by gas logs. Please have your chimney inspected by a hearth professional or chimney sweep in order to determine how to correct the problem.

Can I close my fireplace damper to get more heat from my vented gas log set?

No. Vented gas logs are designed to be operated with the damper in the fully opened position. This gas log set produces carbon monoxide gas. The damper must be removed or clamped fully open using the "C" clamp provided with the set.

My gas logs make a whistling noise when I burn them. What causes this?

This behavior is normally caused by using a corrugated flex connector to hook up the gas log set. We recommend the installer use the supplied aluminum connector rather than the corrugated flexible type.

Can I move or change the position of the logs on my gas log set?

Omni certified log sets should not be altered - log placement must be exactly as indicated in the set's installation instructions.

Can I install my gas log set myself?

No. We recommend installation be performed by an NFI certified hearth professional, HVAC professional, gas fitter, or plumber experienced in gas log installation. Most localities require installation of any gas appliance to be performed by a professional. Please check with your local inspection agency/department.

What are the gas logs made of?

The gas logs are made of a mixture of pre-fired, expanded clay and a special high-temperature cement, with a wire mesh reinforcement. This combination creates a strong, ceramic material capable of withstanding extreme temperatures, yet also allows molding of the intricate detail found in these gas log sets.

I have a vented log set, and the logs have black soot on them. Is this normal?

Soot build-up on vented gas logs is a normal part of the combustion process. Natural gas log sets generally produce less soot than liquid propane log sets. We recommend any soot build up be removed periodically using a product designed for gas log soot removal.

Can I add a remote control to my log set after it has been installed?

You can easily add a remote to the gas log set if it is already equipped with a solenoid type valve or an IPI ignition system. In addition, vented sets without solenoid valves can also be converted to remote operation by adding, in the field, a solenoid type valve; however, a hearth professional must do this type of in-the-field modification.

Do I have to re-light the pilot light every time I use my log set?

No. You can light the pilot in the fall and leave it on throughout the winter, as the pilot is extremely clean burning and uses very little gas (approximately 1,500 BTU/hr.). The log set is equipped with a safety shut off device that will automatically shut the gas off if the pilot flame is extinguished.

Is the gas log set approved by a testing agency?

Yes. The SBS series has been design certified by Omni under the **ANSI Z21.60-2004 Decorative Appliances for Installation in Solid Fuel Burning Fireplaces**. The installation and the provisions for combustion and ventilation air must conform to the **National Fuel Gas Code, ANSI Z223.1/NFPA 54**. Check with your local inspections department for further information.

P. Lighting Instructions

- Remote Ready Valve (REM)

FOR YOUR SAFETY READ BEFORE LIGHTING

WARNING! IF THESE INSTRUCTIONS ARE NOT FOLLOWED EXACTLY, A FIRE OR EXPLOSION MAY RESULT CAUSING PROPERTY DAMAGE, PERSONAL INJURY OR LOSS OF LIFE.

A. This appliance has a pilot that must be lighted by hand. When lighting the pilot, follow these instructions exactly.

B. **BEFORE LIGHTING** smell all around the appliance area for gas. Be sure to smell next to the floor because some gas is heavier than air and will settle on the floor.

WHAT TO DO IF YOU SMELL GAS

- Do not try to light any appliance.
- Do not touch any electrical switch; do not use any phone in your building.
- Immediately call your gas supplier from a neighbor's phone. Follow the gas supplier's instructions.
- If you cannot reach your gas supplier, call the fire department.

C. Use only your hand to push in or turn the gas control handle. Never use tools. If the handle will not push in or turn by hand, do not try to repair it. Call a qualified service technician. Force or attempted repair may result in fire or explosion.

D. Do not use this appliance if any part has been under water. Immediately call a qualified service technician to inspect the appliance and to replace any part of the control system and any gas control that has been under water.

LIGHTING INSTRUCTIONS

1. **STOP!** Read the safety information previously listed above.
2. Turn gas control handle clockwise ↻ to the "OFF" position.
3. Wait 5 minutes to clear out any gas. Then smell for gas, including near the floor. If you smell gas, STOP! Follow "B" in the safety information above on this label. If you don't smell gas, go to the next step.
4. Locate pilot (mounted on the right side of the top burner pan).
5. Turn control handle counterclockwise ↺ to the "PILOT" position.
6. Place a lit match at the pilot burner, and simultaneously push in on the control handle. This should ignite the pilot.
7. Once the pilot lights, continue to depress the control handle for 1 minute.
8. After 1 minute, slowly release control handle and it will pop back out. Pilot should remain lit. If it goes out, repeat Steps 1 through 7.
   - If the handle does not pop out when released, stop and immediately call your service technician or gas supplier.
   - If the pilot will not stay lit after several tries, turn the gas control handle to "OFF" and call your service technician or gas supplier.
9. Turn gas control handle counterclockwise ↺ to "ON".

TO TURN OFF GAS TO APPLIANCE

Turn gas control handle clockwise ↻ to "OFF" position. Do not force.

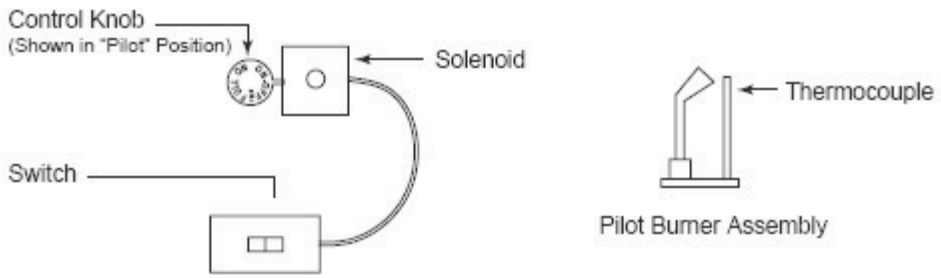

Q. Lighting Instructions

- Safety Pilot Valve (MAN)

FOR YOUR SAFETY READ BEFORE LIGHTING

WARNING: IF THESE INSTRUCTIONS ARE NOT FOLLOWED EXACTLY, A FIRE OR EXPLOSION MAY RESULT CAUSING PROPERTY DAMAGE, PERSONAL INJURY OR LOSS OF LIFE.

A. This appliance has a pilot that must be lighted by hand. When lighting the pilot, follow these instructions exactly.

B. BEFORE LIGHTING smell all around the appliance area for gas. Be sure to smell next to the floor because some gas is heavier than air and will settle on the floor.

WHAT TO DO IF YOU SMELL GAS

Do not try to light any appliance.

Do not touch any electrical switch: do not use any phone in your building.

Immediately call your gas supplier from a neighbor's phone. Follow gas supplier's instructions.

If you cannot reach your gas supplier, call the fire department.

C. Use only your hand to push in or turn the gas control handle. Never use tools. If the handle will not push in or turn by hand, do not try to repair it. Call a qualified service technician. Force or attempted repair may result in fire or explosion.

D. Do no use this appliance if any part has been under water. Immediately call a qualified service technician to inspect the appliance and to replace any part of the control system and any part of the gas control that has been under water.

LIGHTING INSTRUCTIONS

1. STOP! Read the safety information listed above.
2. Turn gas control handle clockwise ↻ to the "OFF" position.
3. Wait 5 minutes to clear out any gas. Then smell for gas, including near the floor. If you smell gas, STOP!. Follow "B" in the safety information above. If you do not smell gas go on to next step.
4. Locate pilot (mounted on the right side of the top burner pan).
5. Turn control handle counterclockwise ↺ to the "PILOT" position.
6. Place a lit match at the pilot burner and simultaneously push in on the control handle. This should ignite the pilot.
7. Once the pilot lights, continue to depress the control handle for 1 minute.
8. After 1 minute slowly release control handle and it will pop back out. Pilot should remain lit. If it goes out, repeat steps 1 through 7.
   If the handle does not pop out when released, stop immediately and call your service technician or gas supplier.
   If the pilot will not stay lit after several tries, turn the gas control handle to the "OFF" position and call your service technician or gas supplier.
9. Turn gas control handle counterclockwise ↺ to the "ON" position.

TO TURN GAS OFF TO APPLIANCE

Turn gas control handle clockwise ↻ to the "OFF" position. Do not force.

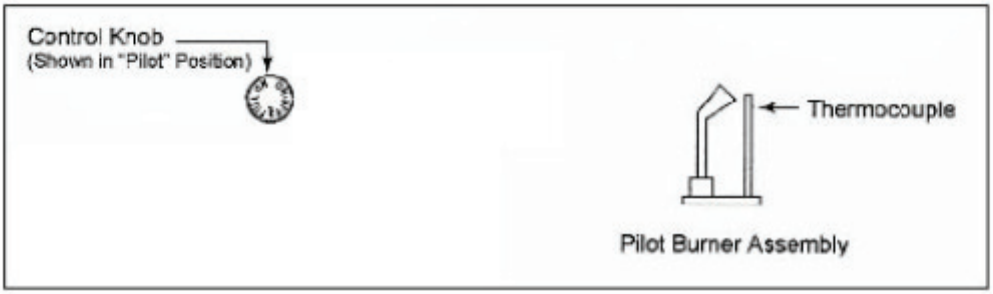

R. Lighting Instructions • IPI Pilot Valve (IPI)

FOR YOUR SAFETY READY BEFORE LIGHTING

WARNING: If you do not follow these instructions exactly, a fire or explosion may result causing property damage, personal injury or loss of life.

A. This appliance is equipped with an intermittent Pilot ignition (IPI) device which automatically lights the burner. DO NOT try to light the burner by hand.
B. BEFORE LIGHTING, smell all around the appliance area for gas. Be sure to smell next to the floor because some gas is heavier than air and will settle on the floor.

WHAT TO DO IF YOU SMELL GAS

Do not try to light any appliance.
Do not touch any electrical switch: do not use any phone in your building.
Immediately call your gas supplier from a neighbor's phone. Follow gas supplier's instructions.
If you cannot reach your gas supplier, call the fire department.

C. Do not use this appliance if any part has been under water. Immediately call a qualified service technician to inspect the appliance and replace any part of the control system and any gas control which has been under water.

WARNING

DO NOT CONNECT 110 VAC TO THE CONTROL VALVE.
-Improper installation, adjustment, alteration, service or maintenance can cause injury or property damage.
-This appliance needs fresh air for safe operation and must be installed so there are provisions for adequate combustion and ventilation.
-If not installed, operated, and maintained in accordance with the manufacture's instructions, this product could expose you to substances in fuel or fuel combustion which are known to the State of California to cancer, birth defects or other reproductive harm.
-Keep burner and control compartment clean.

CAUTION

Hot while in operation. Do not touch. Keep children, clothing, furniture, gasoline and other liquids having flammable vapors away.

LIGHTING INSTRUCTIONS IPI

1. Turn off all electric power to the appliance.
2. This appliance is equipped with an ignition device which automatically lights the burner. DO NOT try to light the burner by hand.
3. Wait (5) minutes to clear out any gas. Then smell for gas, including near the floor. If you smell gas, STOP! Follow "B" in the Safety Information above. If you do not smell gas, go to the next step.
4. Turn on all electric power to the appliance.
5. To light the burner, flip the ON/OFF switch to the "ON" position (the ON/OFF switch may include a wall switch, if so equipped).
6. If the appliance will not operate, follow the instructions "To Turn Off Gas to Appliance" and call your service technician or gas supplier.

TO TURN OFF GAS TO APPLIANCE

1. Turn off all electric power to the appliance if service is to be performed.
2. Flip the ON/OFF switch to the "OFF" position.

Gas Valve

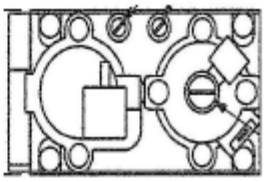

Parts Diagram

Service Parts **SBS BURNER SERIES**

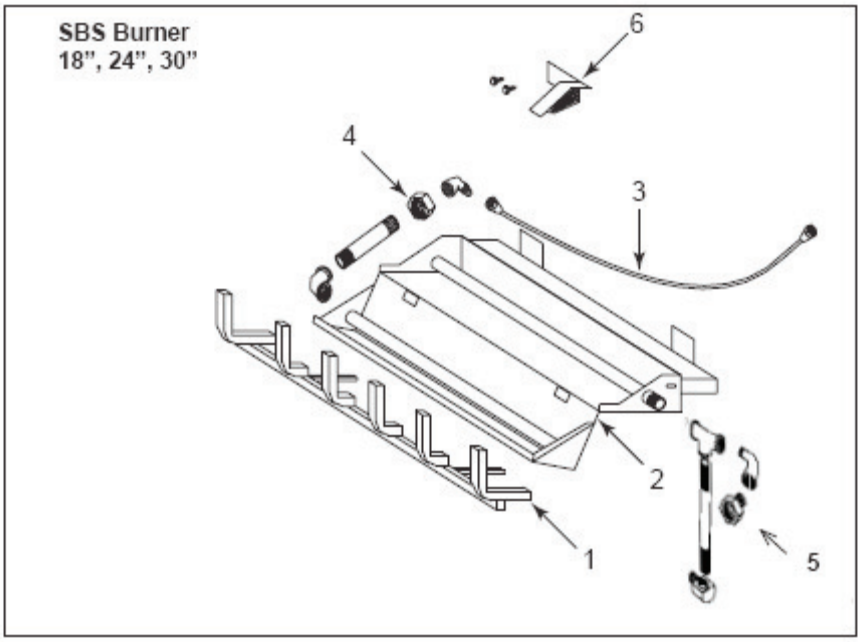

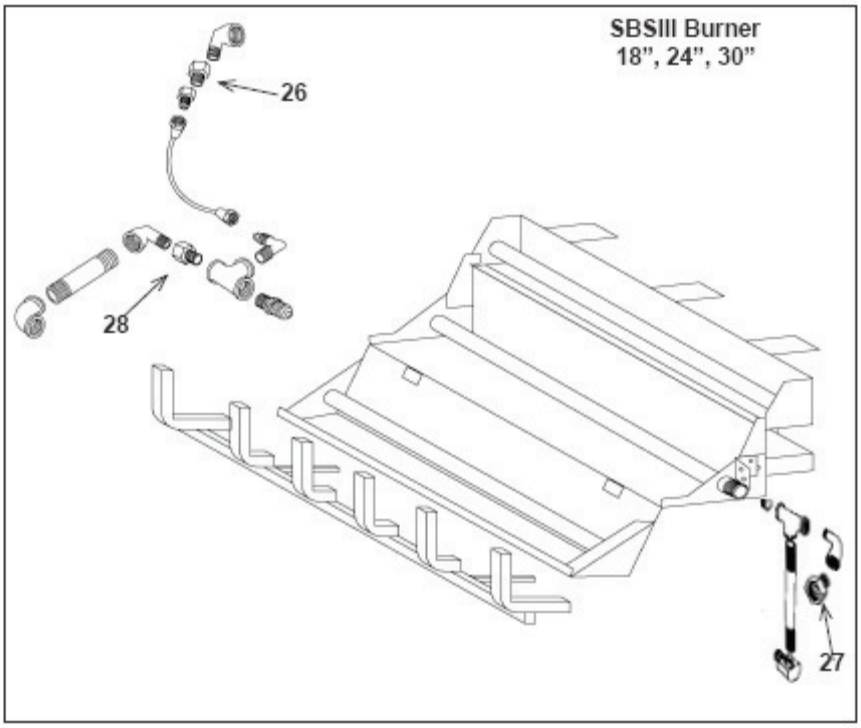

Parts Diagram

Service Parts **SBS BURNER SERIES**

SP Valve Assembly
18",24",30"

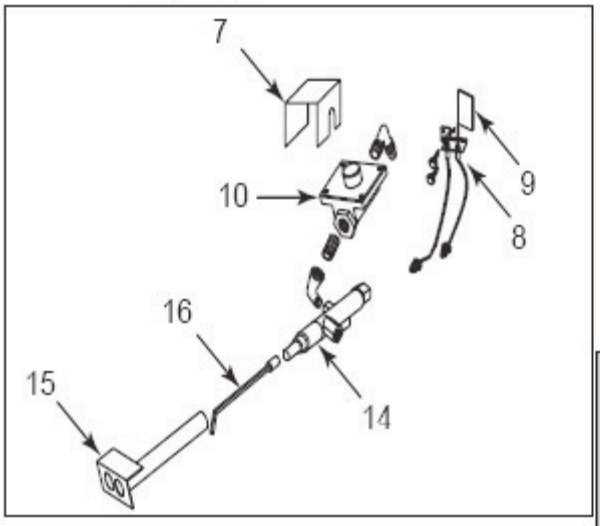

REM Valve Assembly
18",24",30"

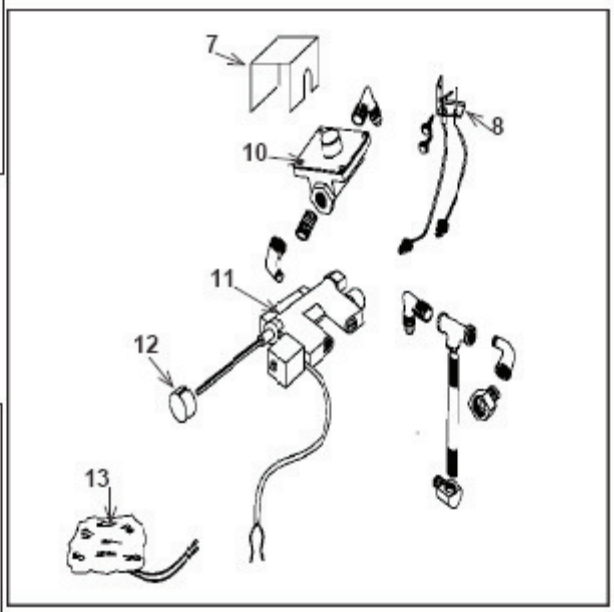

IPI Valve Assembly
18",24",30"

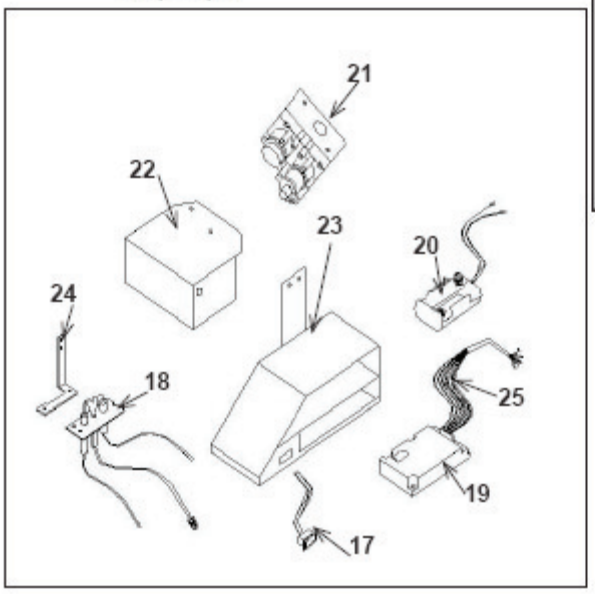

Service Parts SBS BURNER SERIES

#	Description of Part	18"	24"	30"	Qty.
1	Grate Assembly	GR-300-18	GR-300-24	GR-300-30	1
2	Burner Pan Assembly	BPA-300-18	BPA-300-24	BPA-300-30	1
2A	Burner Pan Assembly (SBSIII units)	BPA-300-33	BPA-300-35	BPA-300-40	1
3	Connector	FT-1-18	FT-1-24	FT-1-30	1
4	Bottom Burner Orifice NG (Man & Rem)	BPO-2-49	BPO-2-40	BPO-2-38	1
4	Bottom Burner Orifice LP (Man & Rem)	AM-2-55	AM-2-54	AM-2-52	1
4	Bottom Burner Orifice NG (IPI only)	BPO-2-49	BPO-2-50	BPO-2-35	1
4	Bottom Burner Orifice LP (IPI only)	AM-2-55	AM-2-54	AM-2-53	1
5	Top Burner Orifice NG (Man & Rem)	BPO-2-35	BPO-2-26	BPO-2-26	1
5	Top Burner Orifice LP (Man & Rem)	AM-2-53	AM-2-44	AM-2-43	1
5	Top Burner Orifice NG (IPI only)	BPO-2-35	BPO-2-26	BPO-2-16	1
5	Top Burner Orifice LP (IPI only)	AM-2-53	AM-2-49	AM-2-46	1
6	Pilot Booster (LP only)	MT300-IC	MT300-IC	MT300-IC	1
7	Valve Cover	MT300-VC	MT300-VC	MT300-VC	1
8	Pilot Assy NG (SP only)	07-1008NG	07-1008-NG	07-1008-NG	1
8	Pilot Assy LP (SP & Rem Units)	07-1008-LP	07-1008-LP	07-1008-LP	1
9	Pilot Heat Pad	10-1041	10-1041	10-1041	1
	Pilot Assy (for REM Nat units only) (not shown)	09-1005	09-1005	09-1005	1
10	Regulator NG (4.0)	08-1031	08-1031	08-1031	1
10	Regulator LP (10.0)	08-1030	08-1030	08-1030	1
11	Valve (REM units only)	11-2267	11-2267	11-2267	1
12	Valve Knob (REM units only)	11-2268	11-2268	11-2268	1
13	Log Switch (REM units only)	Switch Log	Switch Log	Switch Log	1
14	Valve SP	07-1025	07-1025	07-1025	1
15	SP Handle Tube Assy	11-2110	11-2110	11-2110	1
16	SP Handle Assy	14-1019	14-1019	14-1019	1
17	Switch (IPI Unit Only)	01-1069	01-1069	01-1069	1
18	Pilot NG (IPI Unit Only)	2090-012	2090-012	2090-012	1
18	Pilot LP (IPI Unit Only)	2090-013	2090-013	2090-013	1
19	Control Module (IPI Unit Only)	593-592	593-592	593-592	1
20	Battery Holder (IPI Unit Only)	593-594A	593-594A	593-594A	1
21	Valve NG (IPI Unit Only)	593-500	593-500	593-500	1
21	Valve LP (IPI Unit Only)	593-501	593-501	593-501	1
22	Valve Bracket (IPI Unit Only)	MT-350-VC	MT-350-VC	MT-350-VC	1
23	Control Box (IPI Unit Only)	MT-350-CBA18	MT-350-CBA	MT-350-CBA	1
24	Pilot Bracket (IPI Unit Only)	MT-350-PB18	MT-350-PB3	MT-350-PB3	1
25	Wire Harness (IPI Unit Only)	593-590A	593-590A	593-590A	1
26	Top Burner Orifice NG (SBSIII REM & MAN Valve units)	BPO-2-40	BPO-2-24	BPO-2-10	1
26	Top Burner Orifice LP (SBSIII REM & MAN Valve units)	AM-2-53	AM-2-51	AM-2-51	1
26	Top Burner Orifice NG (SBSIII REM & MAN Valve units)	BPO-2-40	BPO-2-24	BPO-2-10	1
26	Top Burner Orifice LP (SBSIII REM & MAN Valve units)	AM-2-53	AM-2-51	AM-2-51	1

Service Parts SBS BURNER SERIES

#	Description of Part	18"	24"	30"	Qty.
27	Middle Burner Orifice NG (SBSIII REM & MAN)	BPO-2-36	BPO-2-28	BPO-2-16	1
27	Middle Burner Orifice LP (SBSIII REM & MAN)	AM-2-50	AM-2-47	AM-2-47	1
27	Middle Burner Orifice NG (SBSIII IPI only)	BPO-2-36	BPO-2-28	BPO-2-16	1
27	Middle Burner Orifice LP (SBSIII IPI only)	AM-2-50	AM-2-47	AM-2-47	1
28	Bottom Burner Orifice NG (SBSIII REM & MAN only)	BPO-2-46	BPO-2-42	BPO-2-20	1
28	Bottom Burner Orifice LP (SBSIII REM & MAN only)	AM-2-60	AM-2-52	AM-2-56	1
28	Bottom Burner Orifice NG (SBSII IPI only)	BPO-2-46	BPO-2-42	BPO-2-20	1
28	Bottom Burner Orifice LP (SBSIII IPI units)	AM-2-60	AM-2-52	AM-2-56	1
	Battery Cover Log (IPI units only) (not shown)	586A	586A	586A	1
	Installation Instructions	16-1012	16-1012	16-1012	1

HEATMASTER
AMERICAN GAS LOG

Warranty

DECORATIVE GAS LOG LIMITED WARRANTY

Heatmaster/American Gas Log, LLC. extends the following warranty for decorative gas log sets as described herein, while it is in its location of original installation. Dealers and employees of Heatmaster/American Gas Log, LLC., have no authority to make any warranty or authorize any remedies in addition to or inconsistent with the terms of this Program. This warranty gives you specific legal rights. You may also have other rights which vary from state to state.

LIMITED WARRANTY. All refractory cement logs manufactured by Heatmaster/American Gas Log, LLC., have a lifetime warranty against breakage due to heat to the original owner in the original installation. All metal parts, including burners and grate assemblies are warranted for 5 years. All mechanical parts are warranted for 1 year. All refractory cement logs manufactured by Heatmaster/American Gas Log, LLC., have a lifetime warranty against breakage due to heat to the original owner in the original installation. All metal parts, including burners and grate assemblies are warranted for 5 years. All mechanical parts are warranted for 1 year. This Limited Warranty extends only to decorative gas log sets installed in the United States or Canada.

EXCLUSIONS AND QUALIFICATIONS. This Limited Warranty is subject to the following exclusions and qualifications: (1) This Limited Warranty does not apply to, and Heatmaster/American Gas Log,LLC., assumes no responsibility for any damages that result due to the installation or operation of this decorative gas log set not in accordance with both the installation instructions and operating instructions furnished. (2) The decorative gas log set must be subjected to normal use as explained in the operating instructions and the listing agency identification label attached to the burner pan assembly. This decorative gas log set is only intended to burn the fuel specified on the listing agency identification label. Use of any other fuel other than specified on the listing agency identification label can create a life threatening situation and will void this limited warranty. (3) This Limited Warranty applies only if the decorative gas log system has been installed in a vented fireplace that is suitable for burning wood. Adequate ventilation must be provided to allow proper drafting of the fireplace chimney system. Heatmaster/American Gas Log, LLC., assumes no responsibility for improper performance of the decorative gas log set caused by inadequate draft due to environmental conditions (e.g. wind currents, downdrafts), tight-sealing construction of the structure, or mechanical devices (e.g. air handling devices that include forced air furnaces and air conditioning units, exhaust fans and ventilating devices), any and all of which may cause a negative pressure within the structure where the decorative gas log set is installed. (4) This Limited Warranty applies only to the components of the Appliance manufactured by Heatmaster/American Gas Log, LLC. Heatmaster/American Gas Log, LLC expressly excludes from this Limited Warranty any liability hereunder for defects or damage caused by the installation or use of any parts, devices or components that are not manufactured by Heatmaster/American Gas Log, LLC. (5)As part of this limited warranty no Labor costs will be paid by Heatmaster/American Gas Log, LLC. (6) This Limited Warranty will be voided if the decorative gas log set is at any time removed or has been removed from the location in which it was originally installed. (7) Since building code requirements vary greatly throughout the United States and Canada, users of this decorative gas log set should determine in advance whether there are any building code restrictions on the installation and use of this product. Heatmaster/American Gas Log, LLC makes no representation or warranty regarding building code compliance and shall not be responsible for compliance therewith.

THERE ARE NO IMPLIED WARRANTIES OF MERCHANTABILITY OR FITNESS FOR PARTICULAR PURPOSE LIMITATION OF LIABILITY. IT IS EXPRESSLY AGREED AND UNDERSTOOD THAT HEATMASTER/AMERICAN GAS LOG, LLC., OBLIGATION AND PURCHASERS EXCLUSIVE REMEDY UNDER THIS LIMITED WARRANTY, UNDER ANY OTHER WARRANTY, EXPRESSED OR IMPLIED (INCLUDING MERCHANTABILITY AND FITNESS FOR PARTICULAR PURPOSE), OR OTHERWISE, SHALL BE LIMITED TO THE REPLACEMENT OR REPAIR Of ONLY HM/AGL BRAND COMPONENTS AND OPTIONAL COMPONENTS AS SPECIFIED ABOVE. THE DURATION OF ANY IMPLIED WARRANTY INCLUDING MERCHANTABILITY AND FITNESS FOR PARTICULAR PURPOSE APPLICABLE TO THIS GAS APPLIANCE IS LIMITED TO THE DURATION OF THE FOREGOING WARRANTY. SOME STATES DO NOT ALLOW LIMITATIONS ON HOW LONG AN IMPLIED WARRANTY LASTS SO THE ABOVE WARRANTY MAY NOT APPLY TO YOU. IN NO EVENT SHALL HM/AGL BE RESPONSIBLE FOR ANY INCIDENTAL OR CONSEQUENTIAL DAMAGES CAUSED BY DEFECTS IN THE DECORATIVE GAS LOG SET, WHETHER SUCH DAMAGE OCCURS OR IS DISCOVERED BEFORE OR AFTER REPLACEMENT OR REPAIR, AND WHETHER SUCH DAMAGE IS CAUSED BY HM/AGL NEGLIGENCE. SOME STATES DO NOT ALLOW THE EXCLUSION OR LIMITATION OF INCIDENTAL OR CONSEQUENTIAL DAMAGES, SO THE ABOVE LIMITATION OR EXCLUSION MAY NOT APPLY TO YOU.

HOW TO OBTAIN SERVICE. To obtain service under this Program, you must:

1. Send written notice of the claimed condition to the Technical Service Department, Heatmaster/American Gas Log, LLC. 3625 Benson Rd, Angier, NC 27501
2. Provide proof of purchase to Heatmaster/American Gas Log, LLC.
3. Provide Heatmaster/American Gas Log, LLC reasonable opportunity to investigate the claim, including reasonable opportunity to inspect the Fireplace prior to any repaid or replacement work and before the Fireplace has been removed from the place of original installation.
4. Obtain Heatmaster/American Gas Log, LLC consent to any warranty work before the work is done.