Flame-tec



Weather Beater Electronic Control System

Model: WBECS

Owner's Operation and Installation Manual

⚠ WARNING: FOR OUTDOOR USE ONLY!
⚠ WARNING: Improper installation, adjustment, alteration, service or maintenance can cause injury or property damage. Read the installation, operating and maintenance instructions thoroughly before installing or servicing this equipment.
⚠ WARNING: Do not store or use gasoline or other flammable vapors and liquids in the vicinity of this or any other appliance.
⚠ WARNING: A propane cylinder not connected for use shall not be stored in the vicinity of this or any other appliance.
⚠ WARNING: For use with Natural or Propane gas only. NO SOLID FUELS TO BE USED WITH THIS SYSTEM.

FOR YOUR SAFETY

If you smell gas:

1. **Shut off gas to appliance.**
2. **Extinguish any open flame.**
3. **If odor continues, keep away from appliance and immediately call your gas supplier or fire department.**

CALIFORNIA PROPOSITION 65

⚠ WARNING

This product can expose you to Chromium, which is known to the state of California to cause cancer and birth defects or other reproductive harm. (For more information, go to: www.p65warnings.ca.gov)

The Weather Beater Electronic Control System utilizes CSA certified components to be added to an outdoor product.

Installation must conform with local codes or, in the absence of local codes, with the *National Fuel Gas Code, ANSI Z223.1 / NFPA, or International Fuel Gas Code.*

The appliance, when installed, must be electrically grounded in accordance with local codes or, in the absence of local codes, with the *National Electric Code, ANSI/NFPA 70*, if applicable.

INSTALLER: Leave this manual with the appliance.
CONSUMER: Retain the manual for future reference.

TABLE OF CONTENTS

System Overview 2
Electronics 2
Gas Valve and Pilot Components 2
Gas Requirements 3
Ignition Control Specifications and Wiring Diagram 3
Product Dimensions 5
Installation 5
Gas Connection 6
Pilot Assembly Connections 6
Proper Venting 7
Acceptable Media 7
Operation 7
Maintenance 8
FAQ and Helpful Tips for proper operation 8
Troubleshooting 9
Parts List & Accessories 11

SYSTEM OVERVIEW

- Components are CSA Certified.
- 12 vac system to comply to NEC 2014 Article 680 requirements.
- -20° to 175° temperature range.
- Durable connections designed to resist outdoor conditions.
- 265,000 BTU's at 1" pressure drop.
- TC Flame-sense system.
- Hot Surface Ignitor (HSI).
- LED diagnostics.
- Electronics are ANSI Z21.20-2014 certified.
- I-Flame app is available as an option.

ELECTRONICS

- Certified ANSI Z21.20-2014
- 12 VAC for installation within 5 feet of water.
- Potted control module to protect against moisture and damage.
- Hot Surface Ignition (HSI), provides stable burner ignition in harsh conditions.
- Thermocouple Flame Sense, fast responding and resistant to wind, moisture and corrosion.
- LED diagnostics for field service and troubleshooting.

GAS VALVE AND PILOT COMPONENTS

- All connectors are water resistant.
- Certified CSA 229521-1656058.
- Coils are encapsulated to protect against moisture.
- Pilot has robust flame pattern, wind resistant.
- Pilot injectors are stainless steel.
- Thermocouple is nickel plated for durability.
- Hot Surface Ignitor (HSI) with protective cage.
- Hot Surface Ignitor (HSI) connection is waterproof.
- The Power Wire connector is waterproof.

GAS REQUIREMENTS

FUEL TYPE

Prior to making gas connections, ensure appliance being installed is compatible with the available gas type. Check the label on the appliance to confirm appliance gas type requirement.

GAS PRESSURE

Proper input gas pressures are required for optimum appliance performance.

Gas Pressure Requirements		
Pressure	**Natural Gas**	**Propane Gas**
Minimum	3.5" W.C. 1/8 PSI	8" W.C. 1/3 PSI
Nominal	7" W.C. 1/4 PSI	11" W.C. 1/3 PSI
Maximum	14" W.C. 1/2 PSI	14" W.C. 1/2 PSI

IGNITION CONTROL SPECIFICATIONS AND WIRING DIAGRAM

RECOMMENDED WIRE SIZE

No less than 16 gauge wire for all installations

Note: There are numerous electrical devices that can be used to turn the fire feature on and off. Devices such as wall switches and remote control devices that are used should be UL listed and approved devices for turning high voltage (110 v electrical power) on and off.

WBECS IGNITION CONTROL TIMING

Pre-Purge	3.25 seconds
HSI Warm Up	5 seconds
Trial for Ignition	20 seconds
Flame Failure Response	10 seconds Max
Inter-Purge	5 seconds
Flame Loss Recycles	15 seconds
Flame Loss Recycles Delay	None

ELECTRICAL REQUIREMENTS

⚠ WARNING: The Weather Beater Electronic Control System operates on 12 Volts AC power.

DO NOT attempt to power using 110 Volts AC Power! DAMAGE WILL RESULT!

Acceptable Input Voltages to Supplied 12 Volt AC Transformer

110 / 120 Volt AC

Read label on supplied transformer for proper connection information.

Recommended Wire Size

16 gauge wire for all installations (30 feet maximum length)

WIRING OF MULTIPLE WBECS

The WBECS has a red and a black wire protruding from it. These are the power wires. When multiple WBECS are connected, the polarity between them must be the same. To achieve this, all of the red wires must be connected to the same wire from the transformer and all of the black wires connected to the other wire from the transformer as shown in this illustration.

IT IS NECESSARY TO USE A HIGHER OUTPUT TRANSFORMER WHEN CONNECTING TWO UNITS.

ELECTRICAL CONNECTIONS

The WBECS is supplied with a 12 volt all weather sealed transformer of minimum 60 watts. If another transformer is used it must meet be a Class ll 12 VAC, 5 amp, 60 watt or larger for the unit to operate properly. A minimum 16 gauge wire must be used for installations up to 30 feet in total line length, and 12 gauge for installs up to 100 feet. It is highly recommended to use dielectric grease or silicon to fill any and all wire nuts used in installation of the WBECS.

IGNITION CONTROL SPECIFICATIONS AND WIRING DIAGRAM

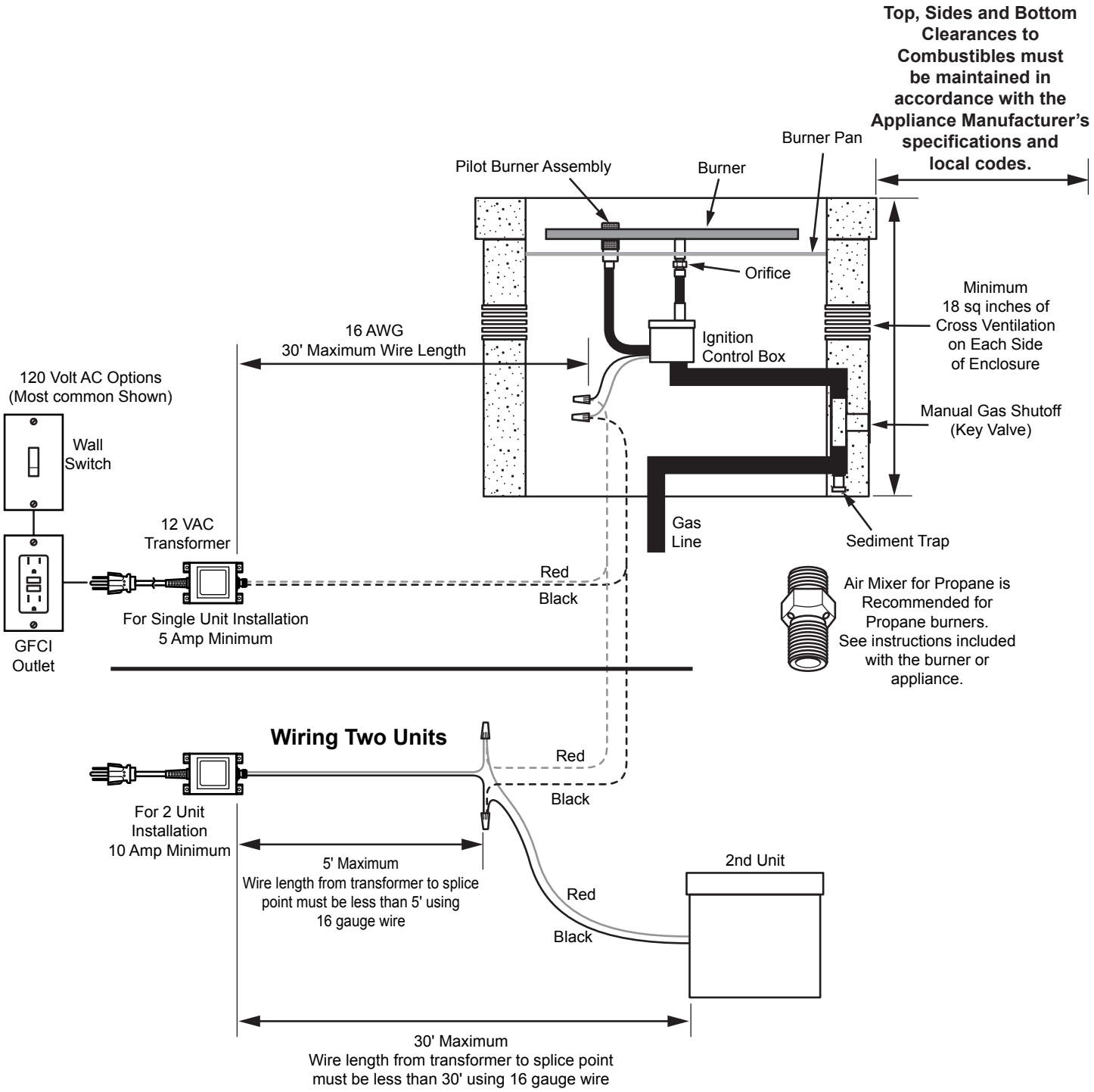

PRODUCT DIMENSIONS

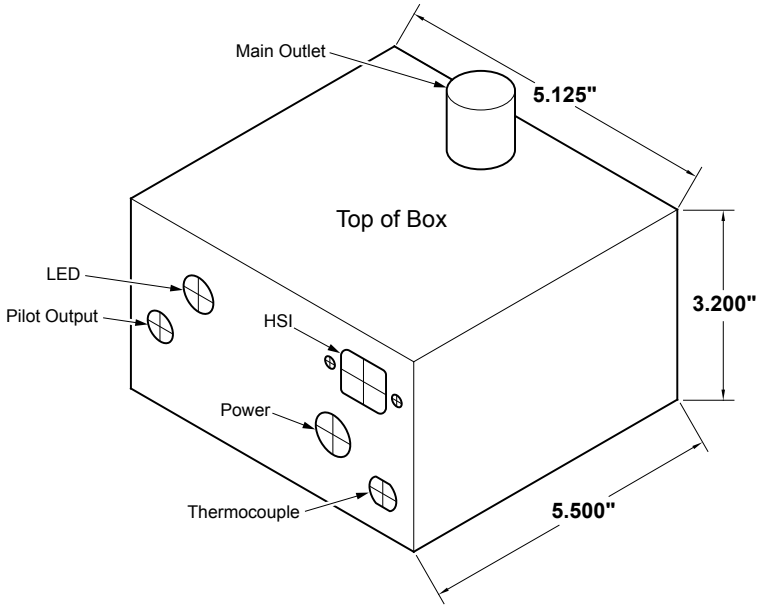

INSTALLATION

⚠ WARNING: Inspect all components before installation. If any parts are damaged, contact your supplier. Do not install damaged parts.

⚠ WARNING: RISK OF FIRE! Provide adequate clearances. Keep the appliance area clear and free from combustible materials, gasoline, and other flammable vapors and liquids.

Only a qualified installer, service agent, or local gas supplier may install and service this product.

Gas Type

Before making gas connections ensure appliance being installed is compatible with the available gas type.

Gas Press ure

Proper input pressures are required for optimum appliance performance. Gas line sizing requirements need to be made following NFPA51.

Pressure Requirements for Appliance

(Natural Gas or Propane)

Maximum Inlet Pressure: $^{1}/_{2}$ psi

Consult the appliance manufacturers instructions for all gas installation requirements.

Typical Pressure Requirements for Appliance:

Minimum Inlet Pressure: 0.25 psi

Nominal Operating Inlet Pressure: 7" WC (NG) / 11" WC (LP)

Gas Connection

Have the gas supply line installed in accordance with local building codes, if any. If not, follow ANSI 223.1. Installation should be done by a qualified installer approved and/or licensed as required by the locality.

Note: A listed manual gas shutoff device must be installed prior to the location of the appliance.

Pilot Assembly

The pilot is configured for natural gas. A propane gas injector is provided in the kit. Additional injector sizes are available to provide proper flame pattern. Please contact Flame-Tec for assistance.

Startup

A small amount of air will be in the gas supply lines. When first lighting appliance it will take a short time for air to purge from lines. Subsequent lighting of the appliance will not require such purging.

Pilot must be clear of all media.

⚠ WARNING: Check for gas leaks after installation is complete.

- Check all fittings and connections.
- Do not use open flame to check for leaks.
- Check for leaks with a commercially available, non-corrosive leak check solution.

⚠ WARNING: Placement of media (glass, lava, stone, etc.) MUST NOT cover the pilot assembly.

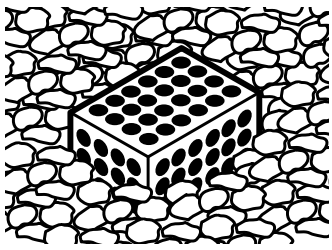

Pilot - Correct Installation

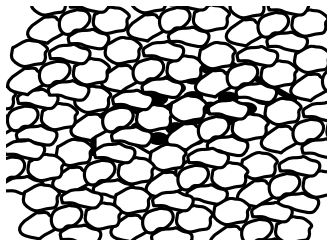

Pilot - Incorrect Installation

GAS CONNECTION

Installation or repair should be performed by a qualified service technician who is locally licensed. The appliance should be inspected before use and at least annually by a qualified technician. It is important to keep the control compartment, burner ports air circulation passageways clear at all time. Certain installations may require more frequent cleaning.

Do not remove any decal or rating plates from the WEBCS.

A gas shut off must be installed outside the exterior of the fire feature for emergency shut off and maintenance. A sediment trap is highly recommended to alleviate any problems from debris or sediment in the gas line. It is the installers responsibility to ensure the fuel supply and line are adequate to supply the maximum BTU for the burner used. Maximum capacity for the WEBCS standard size is 265,000 BTU.

The WEBCS box may now be mounted to the burner or burner pan/combination. The outlet of the control box includes 1/2" connector that fits to the nipple on most burners. Thread sealant must be used on all pipe thread connections. Flame -tec recommends you use a 2" stainless steel nipple or longer to help protect the WEBECS from radiant heat from the burner. The WEBCS is designed to automatically close the gas valve and shut down should temperatures exceed 175° Fahrenheit. Once assembled the WEBCS typically hangs from the burner pan as its support. Please consider proper distance from the burner or pan to allow excess heat to dissipate and not overheat the WEBCS. Proper ventilation must be provided, and a heat shield may be fabricated to help cool the control unit.

PILOT ASSEMBLY CONNECTIONS

We recommend mounting the pilot shield on top of the burner pan and in that configuration, the pilot line, thermocouple and igniter lead should be lowered through a hole in the pan prior to connecting to the control box.

The pilot comes pre-assembled from the factory, so the installer can simply connect the assembly to the main control box. The igniter has a “shaped” push on waterproof connector ensuring that is can only be connected the correct way. Push this black plastic connector parts firmly together until it locks in place. Gently tug on wires to assure connection is secure. The flexible corrugated pilot tube has a flare fitting that should be connected 1/4 turn past hand tight. Please double check to ensure the fitting is snug both into the control box and the flare connection.

The thermocouple should now be connected. It screws onto the 11/32" brass fitting on the control box closest to the black connector. It should be snug, but do not overtighten.

Next, you may mount the pilot to the burner pan. The shield is designed with 3 break-a-way mounting tabs used to secure the shield to the pan with screws. The installer can determine the best placement for the pilot depending on the burner configuration keeping the pilot within 1" from a burner port for quick ignition. All tabs may be used or selected tabs may be removed for easier placement. Tabs are scored along the shield’s edge and can be detached by bending back and forth with pliers.

Once all connections are complete, it is highly recommended to perform a leak test. Turn on the gas supply and using gas test solution or soapy water solution, spray the gas connections on the WEBCS including the pilot connector to ensure it is leak free.

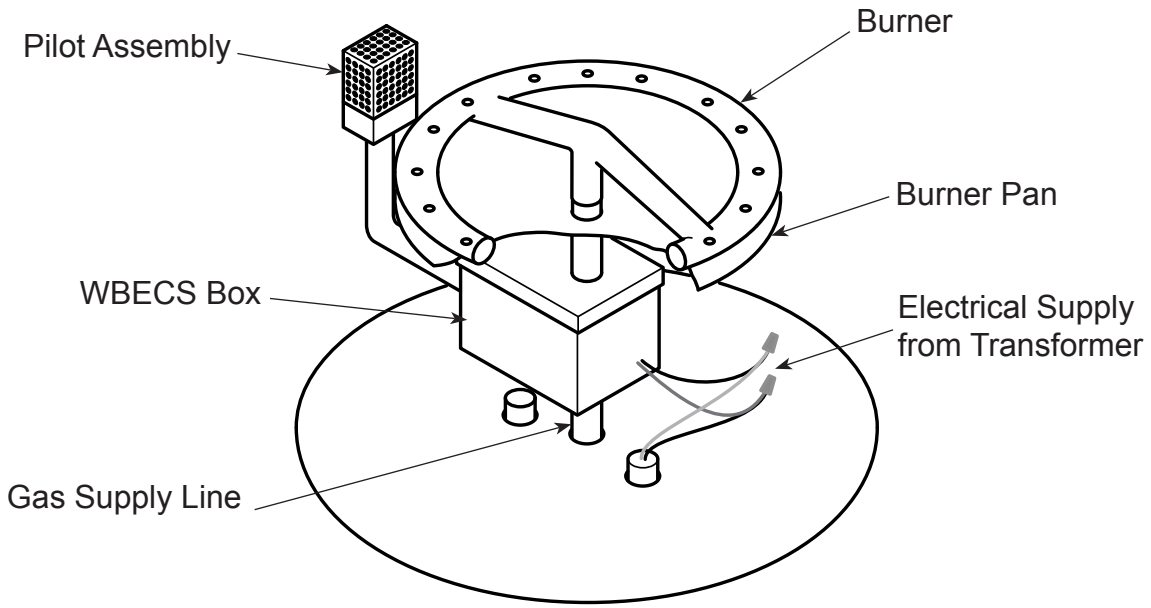

PROPER VENTING

Venting is required to dissipate heat and any residual fuel. Failure to provide proper ventilation could result in overheating and or explosion.

Certain fire pit enclosures may require extra ventilation depending on size, material or extended use.

A minimum of two vents of 18 square inches each are required on opposing sides of the enclosure for a total of 36 square inches. Multiple vents totaling 36 square inches may be incorporated as an alternative. We recommend 4 vents in total to reduce the risk of thermal shutdown. Vents for all units should be placed in the lower third of the enclosure. This is especially important for propane units, as propane gas is heavier than air and can pool in the bottom of an enclosure.

ACCEPTABLE MEDIA

Do not use any other material as media in the fire feature other than those listed below.

- Lava rock no smaller than 1/2" average diameter.
- Fireglass specifically designed and approved for fire features.
- Stones of man made materials (refractory) designed for fire pits.

Media used in the fire feature enhances the look of the flame and improves the fire pit performance. As gas is emitted from the burner the media helps mix air with fuel resulting in a more uniform flame and a cleaner burn. The media will also help spread the flame across all areas of the burner resulting in a faster and more even ignition. The media covering the burner should never exceed 2". If using fireglass, we recommend you use 1/2" diameter minimum and only cover the burner 1/2" to 3/4" width. With all media the pilot burner must be left open to the air for proper ignition. When the media is placed correctly you should see the top of the pilot burner shield. If ignition is delayed or inconsistent you may need to remove some media from the pilot burner area. When using propane gas it is important to check for back pressure created by excessive use of media that could result in gas being forced back through the air mixer.

OPERATION

⚠ WARNING: Do NOT use this appliance if any part has been under water.

Immediately call a qualified service technician to inspect the appliance and to replace any part of the control system and any gas control which has been under water.

⚠ WARNING: HOT – DO NOT TOUCH - SEVERE BURNS MAY RESULT

- **Supervise children in same area as the appliance.**
- **Alert children and adults to dangers of high temperatures.**
- **Flammable materials should not be hung from the appliance or placed on or near the appliance.**

⚠ WARNING: The appliance must be inspected before use and at least annually by a qualified service technician.

Any guard or protective device removed for servicing must be replaced prior to operation.

Keep the appliance area clear and free from combustible materials, gasoline and other flammable vapors and liquids.

FIRE FEATURE START UP

1. Before turning appliance on visually inspect fire feature to ensure combustible materials have not collected inside the feature which could burn once the fire feature is turned on. Be sure anyone standing near the fire feature is aware you will be turning the fire feature on before actually turning it on.
2. Turn fire feature on by turning on the electrical device used to power the fire feature.

Sequence of Operation During Ignition

When powered, indicating a call for heat, the unit will wait for Pre-Purge time. The HSI will be energized for warm up time, then the pilot gas valve will energize for Trial-for-Ignition time. The HSI will turn off after Ignition Time. If the flame is detected on the thermocouple before the end of the trial for ignition time, the HSI will turn off. The main valve will turn on and the pilot valve will remain on until power is removed or flame signal is lost. If flame is lost, the control will turn off the gas valve, and after the flame loss recycle delay, restart the ignition sequence. If a flame is not detected during the Trial-for-Ignition time and Trials-for-Ignition remain, the pilot and HSI will turn off and wait for Inter-Purge time before starting the next ignition attempt. If a flame is detected prior to turning on the gas valve, the control will stop sequence and remain in safety shutdown until the flame signal is below minimum threshold, or drops continuously by minimum threshold value before continuing.

- Power is applied.
- Hot Surface Igniter (HSI) becomes hot and 4 seconds later the pilot gas valve opens.
- Within 10 seconds of power application pilot flame should be visible (at night only).
- Within 10 seconds of pilot flame ignition burner (fire ring/ burner bar) should ignite.

FIRE FEATURE SHUTDOWN

Turn fire feature off by turning off the electrical device used to power the fire feature.

⚠ WARNING: If fire feature fails to turn off completely (small flames still visible) turn off gas supply using the manual gas shutoff.

MAINTENANCE

⚠ WARNING: Maintenance should only be performed by a qualified service technician.

The appliance should be inspected before use and at least annually by a qualified service technician.

⚠ WARNING: Ensure gas and power are shut off and appliance is cool before servicing.

⚠ WARNING: Any guard or protective device removed for servicing must be replaced prior to operation

PRIOR TO EACH USE

Inspect for debris in fire feature – remove debris prior to use.

SEMI-ANNUALLY

1. Visually inspect pilot burner for debris/insect infestation (spider webs).
2. Visually inspect burner holes to ensure they are clear.
3. Clean either of the above as necessary using compressed air.

ANNUALLY

1. Visually inspect pilot Burner for excess corrosion due to heat and moisture.
2. Turn fire feature on to ensure proper operation.

FAQ AND HELPFUL TIPS FOR PROPER OPERATION

1. Cross ventilation is REQUIRED! A minimum of 18 square inches is required on each side of the installation. See page 4. Air flow is your friend!
2. Media (lava rock and glass) minimum of 1/2" and no larger than 2" in diameter.
3. Media must not cover the pilot. The pilot needs air. Avoid packing media against the pilot.
4. Media must be approved by the appliance manufacturer.
5. Large BTU applications (above 150,000 BTU's) could require a large injector.
6. A heat shield should be applied between the burner pan and WBECS
7. The WBECS has a temperature safety shutoff at 175° F.
8. Be sure the gas shut off valve is open.
9. If using wire nuts, be sure they are weather proof and use dielectric grease on the wires.
10. The unit is water resistant. NOT water proof! DO NOT PUT IN WATER OR SUBMERGE.

LED Diagnostic Codes

OFF	No Power / Internal fault
ON	Normal Operation
1 Flash	Hot Start, thermocouple hot at power up.
2 Flash	Trial Lockout, maximum Ignition trials exceeded without flame detection.
3 Flash	Flame Loss Lockout, exceeded maximum losses of flame after proving burner on.
4 Flash	Flame Sense Fault
5 Flash	Valve Fault
Fast Flash	Safety Shutdown

TROUBLESHOOTING

The WEBCS is installed but when turned on nothing happens:

The most common cause is an electrical wiring or power issue. Inspect all electrical connections carefully to confirm all wires from the transformer to the fire feature are connected properly. If wiring is properly connected, disconnect the wires at the fire feature and use a multimeter to confirm a minimum of 12 volts when the fire feature is turned on. If there is not a minimum of 12 volts at the fire feature, conduct the same test at the transformer to determine if the transformer is truly producing a minimum of 12 volts. If you do have a minimum of 12 volts at the fire feature contact us for further assistance.

The WBECS is turned it on, the igniter glows orange and gas can be heard flowing, but does not ignite:

The two most common causes to this fault are; **Air in the Fuel Line** or low **Electrical Current** to the fire feature.

Air in the Gas Line:

New gas line installations often have air trapped inside that must be removed or purged prior to installing the WBECS. If the line has not been properly purged, it may take several cycles of turning the fire feature on and off before the all the air is purged from the gas line.

Understanding how the WBECS operates will help you go through the purging process. When you turn on the WBECS, the igniter will begin to glow, followed by the pilot gas valve opening 4 seconds later. During next 3 minutes the igniter will cycle on and off every 30 seconds while the pilot gas valve will remain on the entire time. Accordingly, if you are attempting to purge air from the gas line, engage the system and leave it on for approximately 3 minutes. Next turn it off and then back on. Let the system run for an additional 3 minutes. When purging air from a new gas line, you may need to cycle the power several times as described above before gas begins to flow. If at any point you smell gas and still don't have ignition, you should attempt to light the pilot flame with a hand held lighter. If ignition occurs when you light it by hand, go to the section, see **Electrical Current** in column 2.

Electrical Current:

If purging the gas line does not solve the problem, the ignition failure is most likely that the the igniter is not getting hot enough to light the gas. The main reason an igniter will not reach full temperature is low amperage. Electricians will commonly check the electrical power, note there are a minimum of 12 volts and think everything is fine electrically, so there must be a problem with the WBECS. The deficiency is not in the volts but rather the amps. Amperage reaching the fire feature is dependent on the gauge wire used between the transformer and the fire feature. Our installation instructions require no less than 16 gauge wire up to 30 feet and 12 gauge up to 100 feet. Smaller wire size will often be the problem in ignition.

Steps to check for sufficient amperage:

- CAUTION: Turn off the gas supply before proceeding.
- Utilizing clamp on ammeter, clamp the ammeter around one of the wires providing power to the WBECS.
- Turn on the fire feature.
- Amperage should range between 1.4 to 1.6 amps initially. Four seconds after being turned on the amperage will jump to approximately 2.0 amps.

If the amperage listed previously is not present AND the wire gauge used was less than listed above, change the wiring. Otherwise contact us for further assistance.

The fire feature was turned off, but small flames can still be seen flickering from the fire feature.

Turn the fire feature back on, let the main burner light and then turn it off again. You may need to do this several times. Small pieces of debris in the gas line may get caught in the main or pilot valve preventing it from completely closing. This is common a new gas line. By cycling power you can often dislodge the debris. If cycling power does not rectify the problem, turn the gas off using the manual gas shutoff and contact us for further assistance.

TROUBLESHOOTING

Sequence of Operation	Fault	Check	Result	Action(s)
Power ON	No Function/No LED	Check for 12V at transformer	No or low voltage	Make sure transformer is powered. If so, replace transformer.
		Check for 12V at control box	No or low voltage	Check wiring for continuity, replace if broken.
				Ensure wire is <50 feet long and 16AWG minimum (smaller number is bigger wire). Replace with larger wire or shorten length. Replace with correct wiring if incorrect.
		Check fuse on HTC01 control module	Fuse OK	Replace control module
			Fuse blown	Check wiring and replace fuse. If fuse blows again, there is a short in the wiring, igniter, gas valve or control module. Locate shorted component and replace.
Igniter warm-up	LED on, no igniter	Check for breaks in igniter	Broken	Replace igniter.
		Check igniter wiring and connector	Damaged or broken	Repair.
Trial for ignition	Igniter ON, does not light. Control goes through all ignition attempts then enters 2 LED flash lockout	Is pilot valve opening?	No. Pilot gas flow	Check input gas pressure. Maximum pressure 1/2 PSI. Install regulator if higher.
				Check voltage to pilot valve. Voltage should read >10.2VDC. Check "No or Low Voltage" above if less.
				Check pilot coil for open circuit. Replace pilot valve if open.
			Yes. Gas flow at pilot No ignition/ low flame	Ensure air has been bled from gas line
				Consult burner manufacturer for minimum gas pressure.
				If natural gas, ensure pilot jet is not for LP
				Check pilot injector for clogged jet. Clean or replace.
				If pilot can be lit with a match, check igniter position and adjust, or check "No or Low Voltage" above.
	Pilot lights but goes off at end of trial without main burner. 2 flash lockout after end of trials. Flame is not detected.	Ensure pilot flame is impinging on the thermocouple	No	Check for clogged pilot or injector and clean.
				Check for correct pilot injector. (LP or Nat)
		Is the thermocouple securely connected to the control box?	No	Tighten connection
			Yes	Replace thermocouple
Burner ON	Unit shuts down after flame detected	LED flashing 3 times, no recycle?	Yes	Maximum flame losses per heat cycle exceeded. Recycle power to reset.
				Ensure pilot flame is impinging on the thermocouple and is adequately sheltered from the wind. If impingement is consistent and no wind present, replace thermocouple.
		LED flashing 4 times, no recycle? (Flame sense fault)	Yes	Turn power off for 10 seconds and back on. If persistent, replace control module
		LED flashing 5 times, no recycle? (Valve Fault)	Yes	Turn power off for 10 seconds and back on. If persistent, check "No or Low Voltage" above. If voltage is okay, replace control module.
		Shuts down before main burner lights	Yes	Check "No or Low Voltage" above
		Shuts down after being on for several minutes or hours and does not relight	Yes	Over temperature - ensure control compartment remains under 175° F. If continued operation above this temperature, life of product will be reduced.
		Unit shuts down for 1 minute every 24 hours	Yes	This is normal operation for validation of safety circuitry.

PARTS LIST & ACCESSORIES

Product No.	Description	
FT-WBECS	Weather Beater Electronic Control	
FT-WBEX24	Weather Beater 24" Pilot Assembly	
FT-WBEX36	Weather Beater 36" Pilot Assembly	
FT-3223	Pilot Injector (LP)	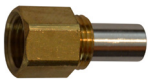
FT-3225	Pilot Injector (Nat)	
FT-3239	Pilot Injector (Nat)	
FT-24TC	Thermocouple	
FT36TC	Thermocouple	
FT-WS	WeatherSmart 12V/24V (Blue Tooth/WiFi)	
FT-TRN12	12 Volt Transformer with 30 Foot Cable	
FT-TRN24	24 Volt Transformer with 30 Foot Cable	
FT-NGCK	Natural Gas Connection Kit	
FT-LPCK	Propane Connection Kit with Regulator	
FT-LPM	LPG Air Mixer	